Biophysics I (BPHS 3090)

Instructors: Prof. Christopher Bergevin (cberge@yorku.ca)

Website: http://www.yorku.ca/cberge/3090W2015.html

York University
Winter 2015
Lecture 10

Reference/Acknowledgement:
- TF Weiss (Cellular Biophysics)
- D Freeman

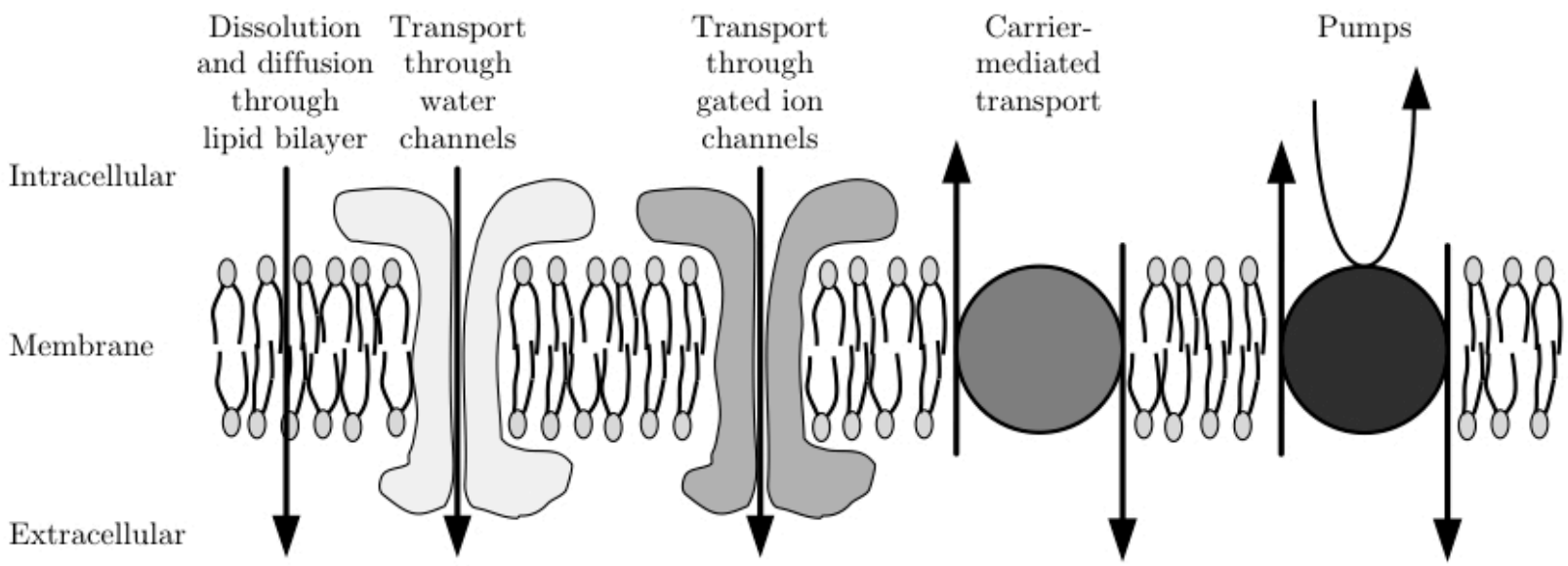
Dissolution and diffusion through lipid bilayer
Transport through water channels
Transport through gated ion channels
Carrier-mediated transport
Pumps
Intracellular
Membrane
Extracellular

Figure 2.19

Electrical Responses in the Sensory Systems

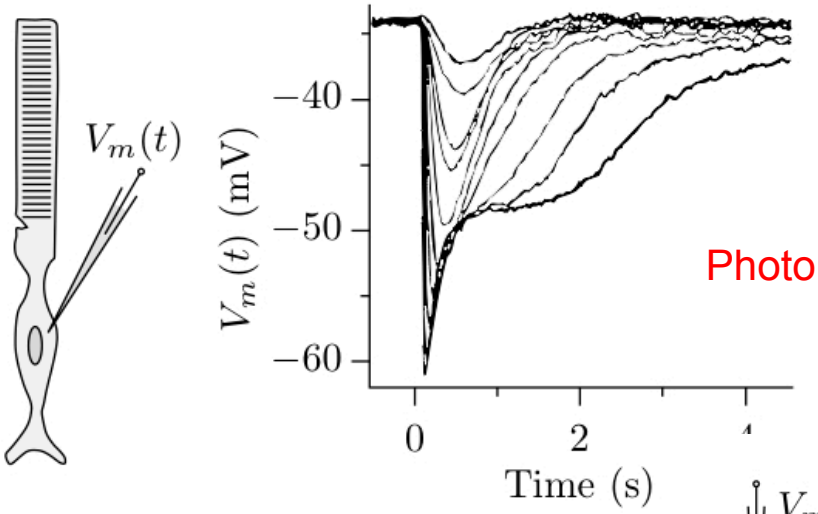

Photoreceptors

Figure 1.3

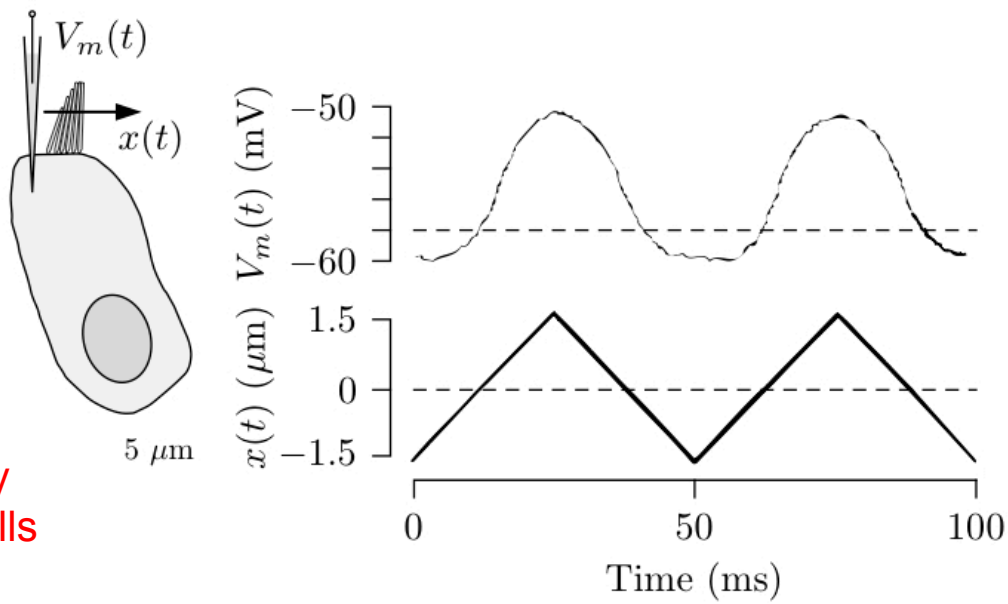

Auditory
Hair Cells

Figure 1.5

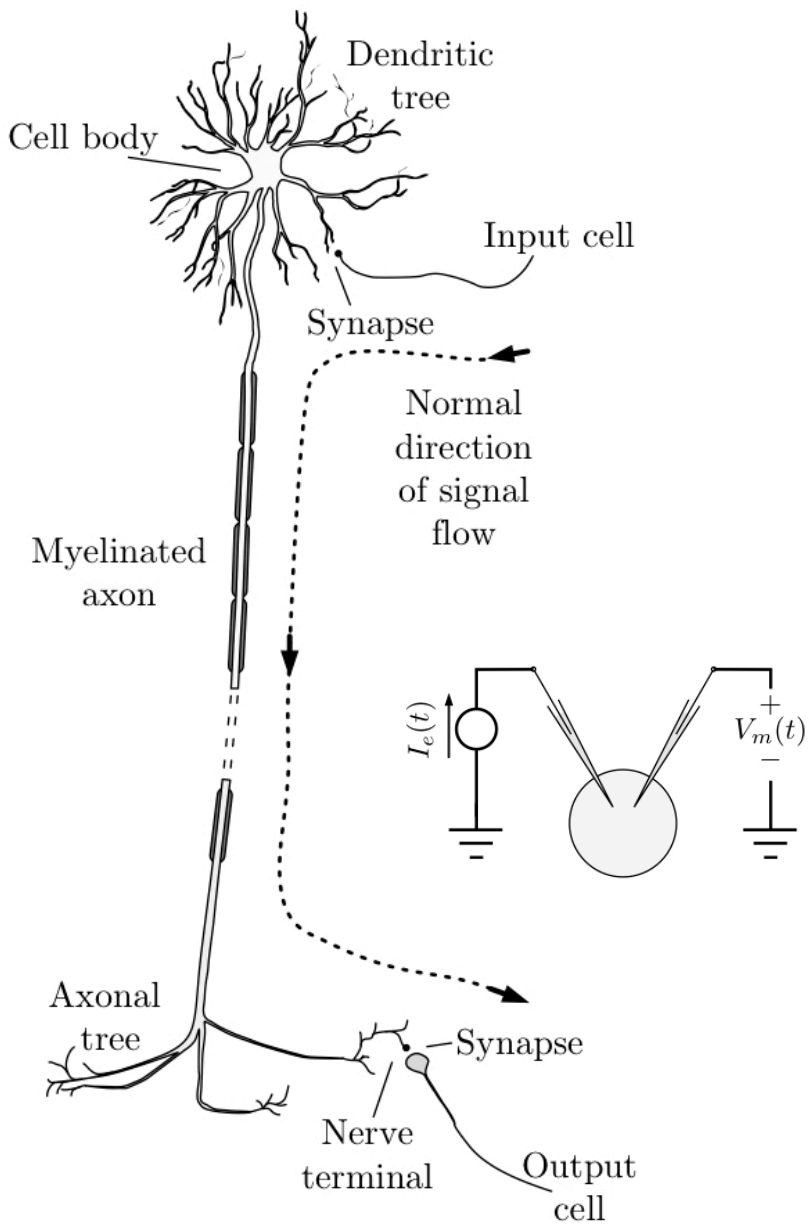

Figure 1.22

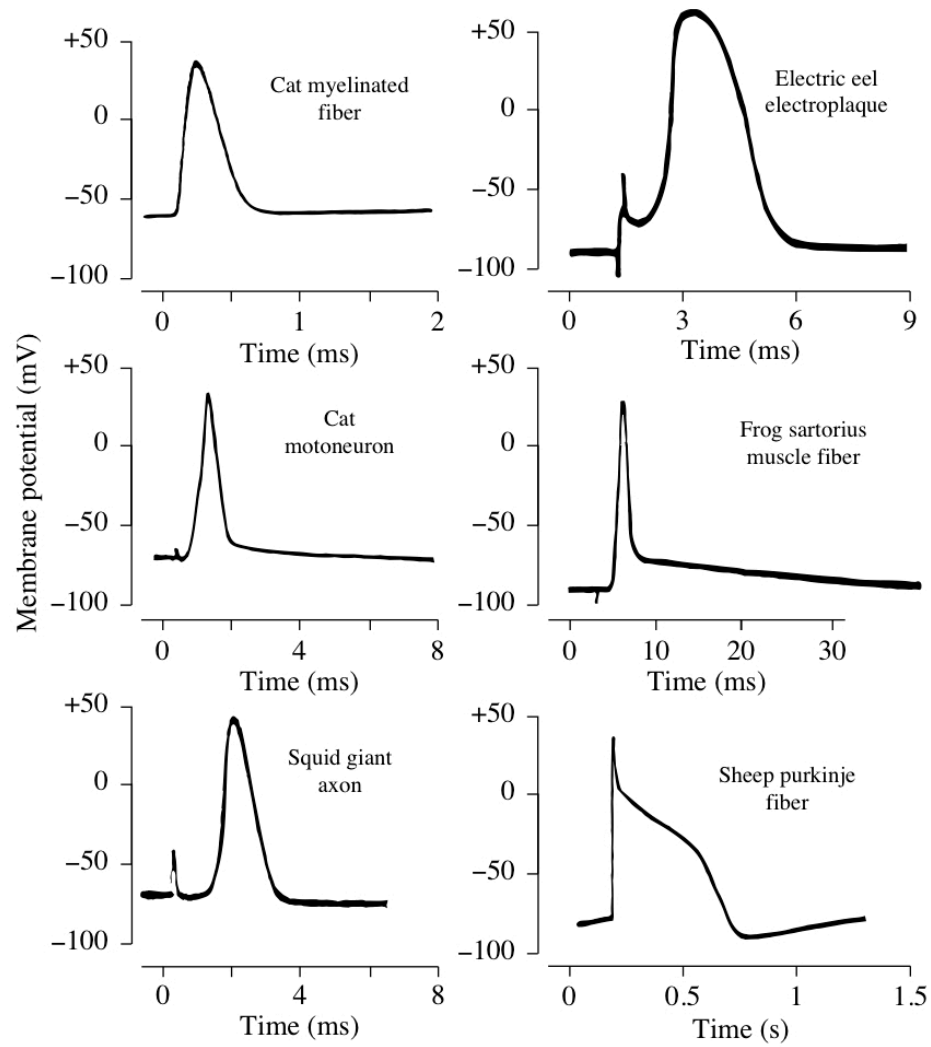

Figure 1.9

→ Electrical properties of cells are important!

Model of Steady-State Electrodiffusion through Membranes

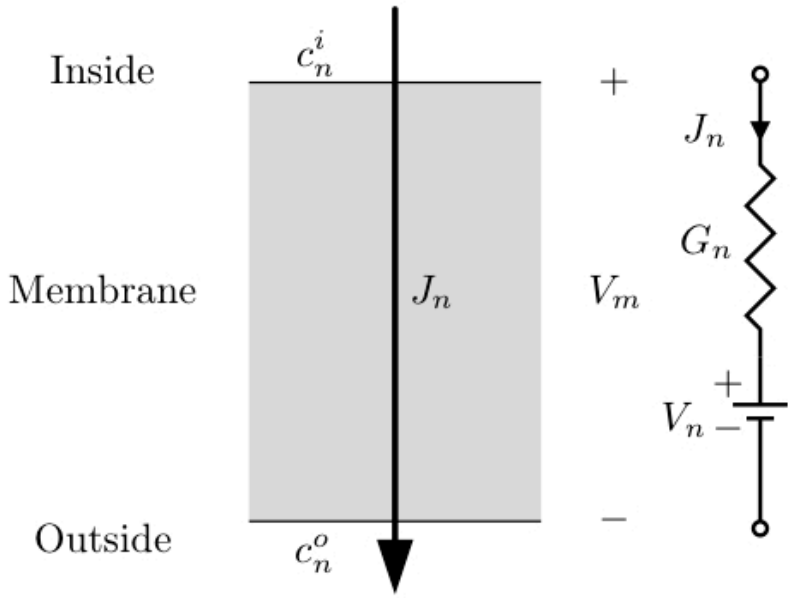

→ Now we will consider the effect of solutes having charge

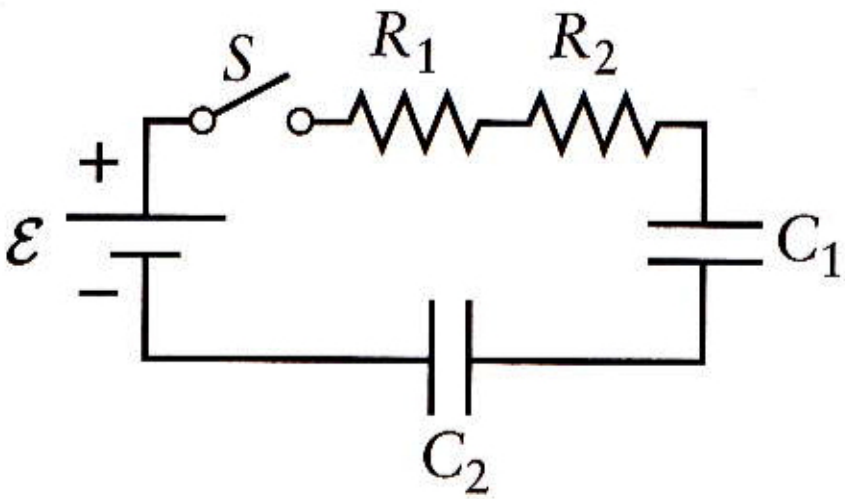
S
R1
R2
+
ε
−
C1
C2

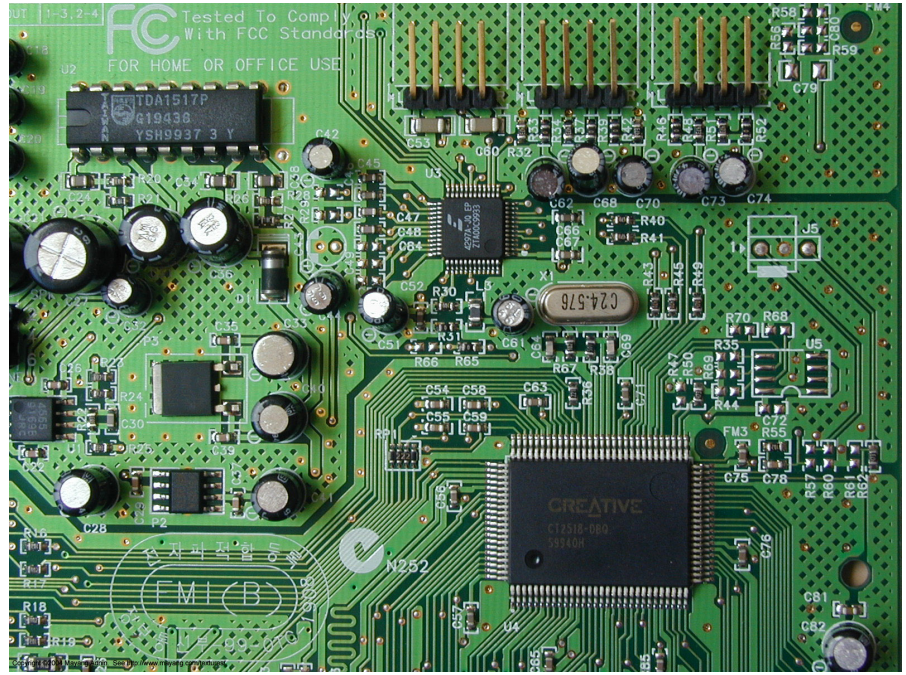
Tested To Comply
With FCC Standards
FOR HOME OR OFFICE USE
TDA1517P
CREATIVE

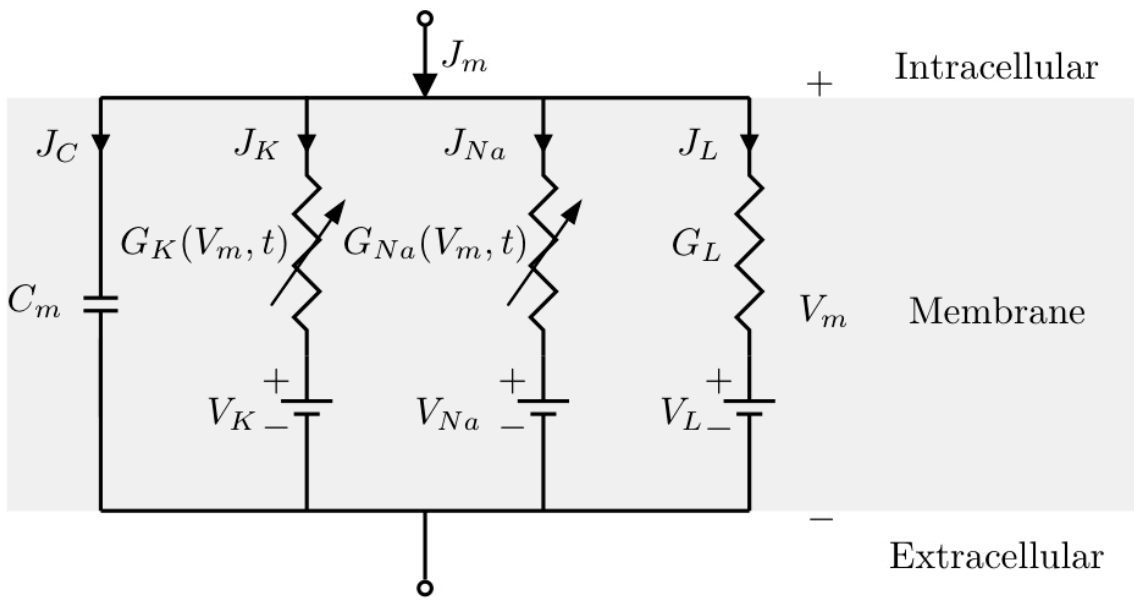
J_m
Intracellular
+
J_C
J_K
J_{Na}
J_L
$G_K(V_m,t)$
$G_{Na}(V_m,t)$
G_L
C_m
V_m
Membrane
V_K
V_{Na}
V_L
−
Extracellular

Basic E&M Review (well, the E part....)

- Charge

- Electric Potential (i.e., voltage)

- Circuit Elements: resistors, conductors, inductors, batteries, etc....

- Circuit Basics (e.g., Kirchoff's laws)

- RLC circuit

Duality here! River water has:

1. Kinetic energy (due to flow)

2. Potential energy (due to gravity)

Question: What's the 'battery'?

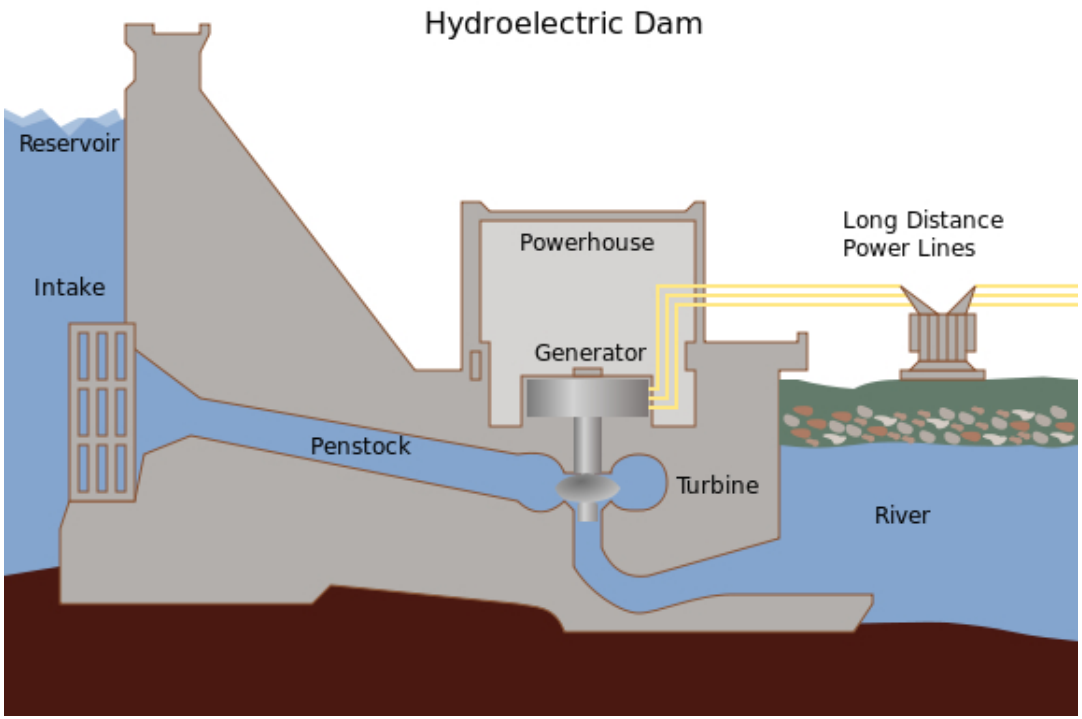
Hydroelectric Dam
Reservoir
Intake
Powerhouse
Long Distance
Power Lines
Generator
Penstock
Turbine
River

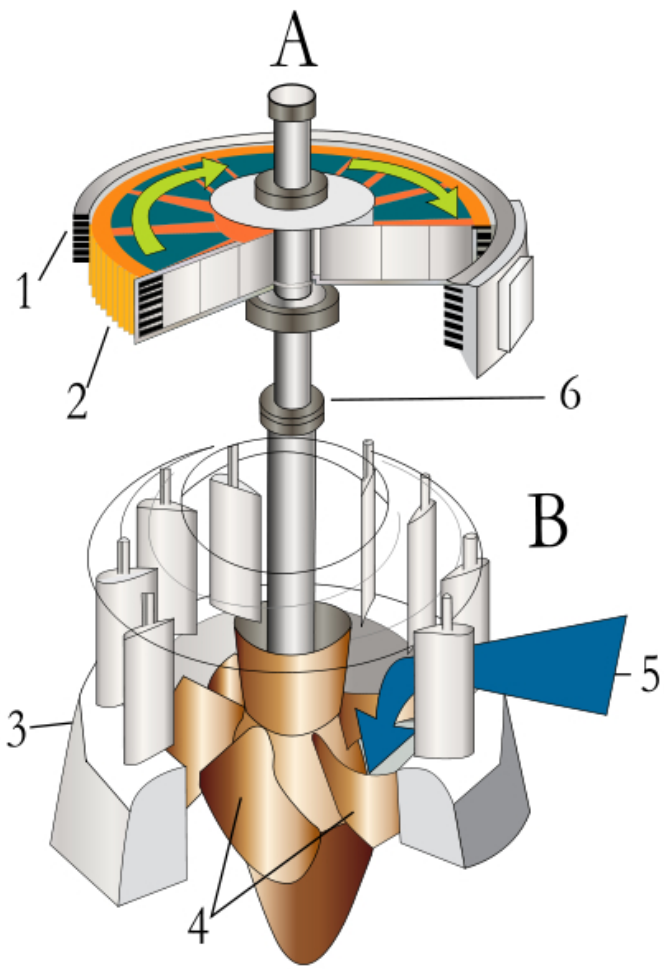
A
1
2
6
B
5
3
4

Wikipedia

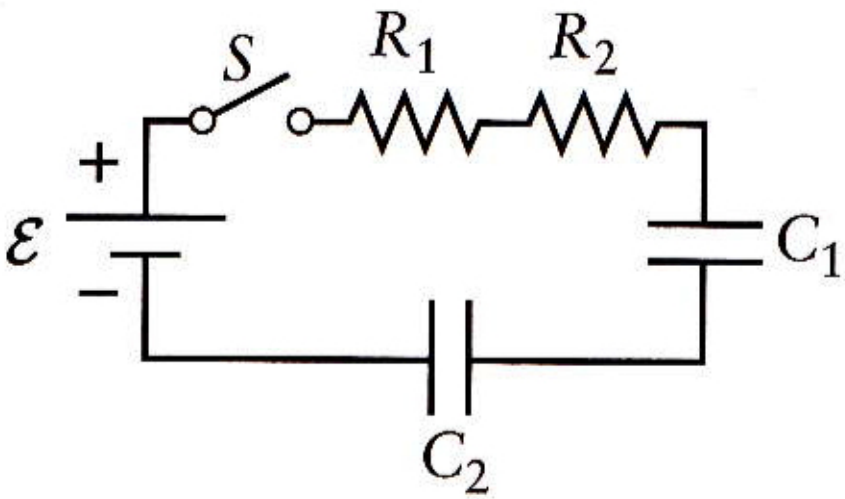
S
R1
R2
+
ε
−
C1
C2

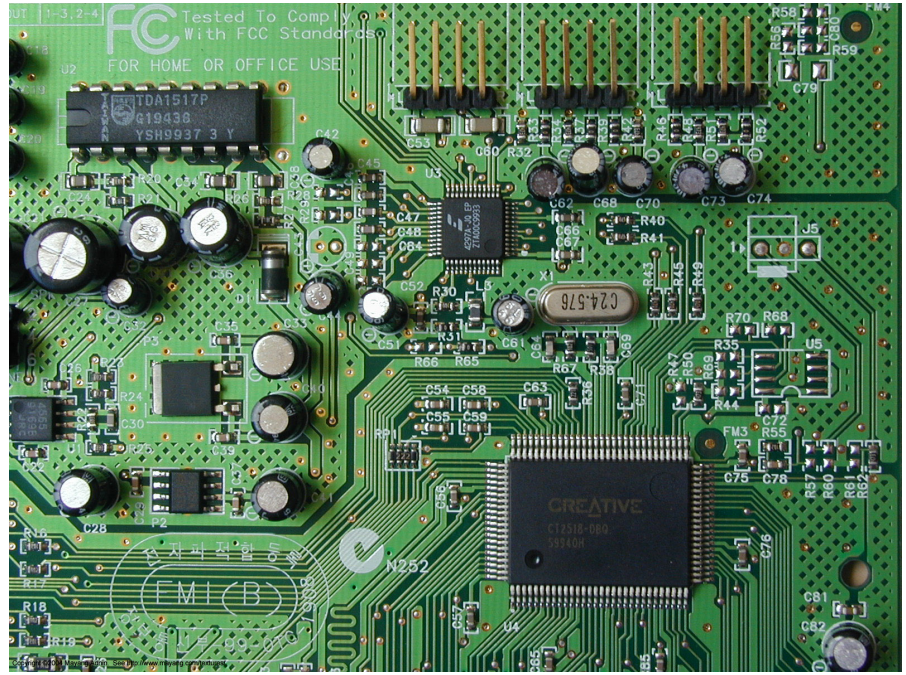
Tested To Comply
With FCC Standards
FOR HOME OR OFFICE USE
TDA1517P
CREATIVE

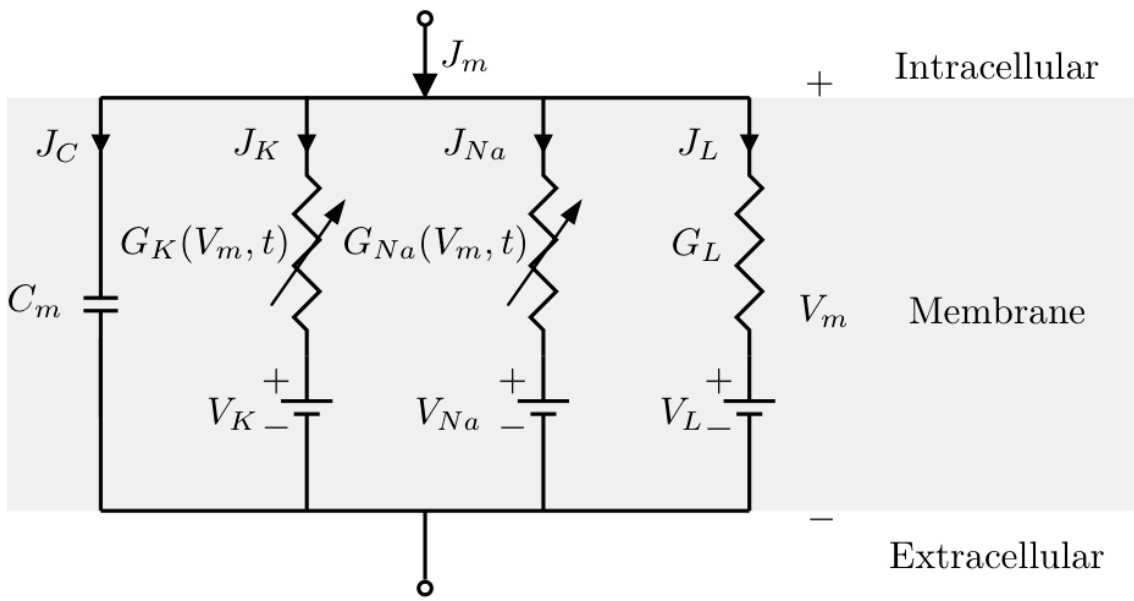
J_m
Intracellular
+
J_C
J_K
J_{Na}
J_L
$G_K(V_m,t)$
$G_{Na}(V_m,t)$
G_L
C_m
V_m
Membrane
V_K
V_{Na}
V_L
−
Extracellular

Basic E&M Review (well, the E part....)

- Circuit Basics (e.g., Kirchoff's laws)

Junction rule
(conservation of charge)

$$\sum_n I_{in}^n = \sum_n I_{out}^n$$

Loop rule
(conservation of energy)

$$\Delta V_{loop} = \sum_n \Delta V^n = 0$$

Review

Using Kirchoff's Laws, find the current through each of the three resistors

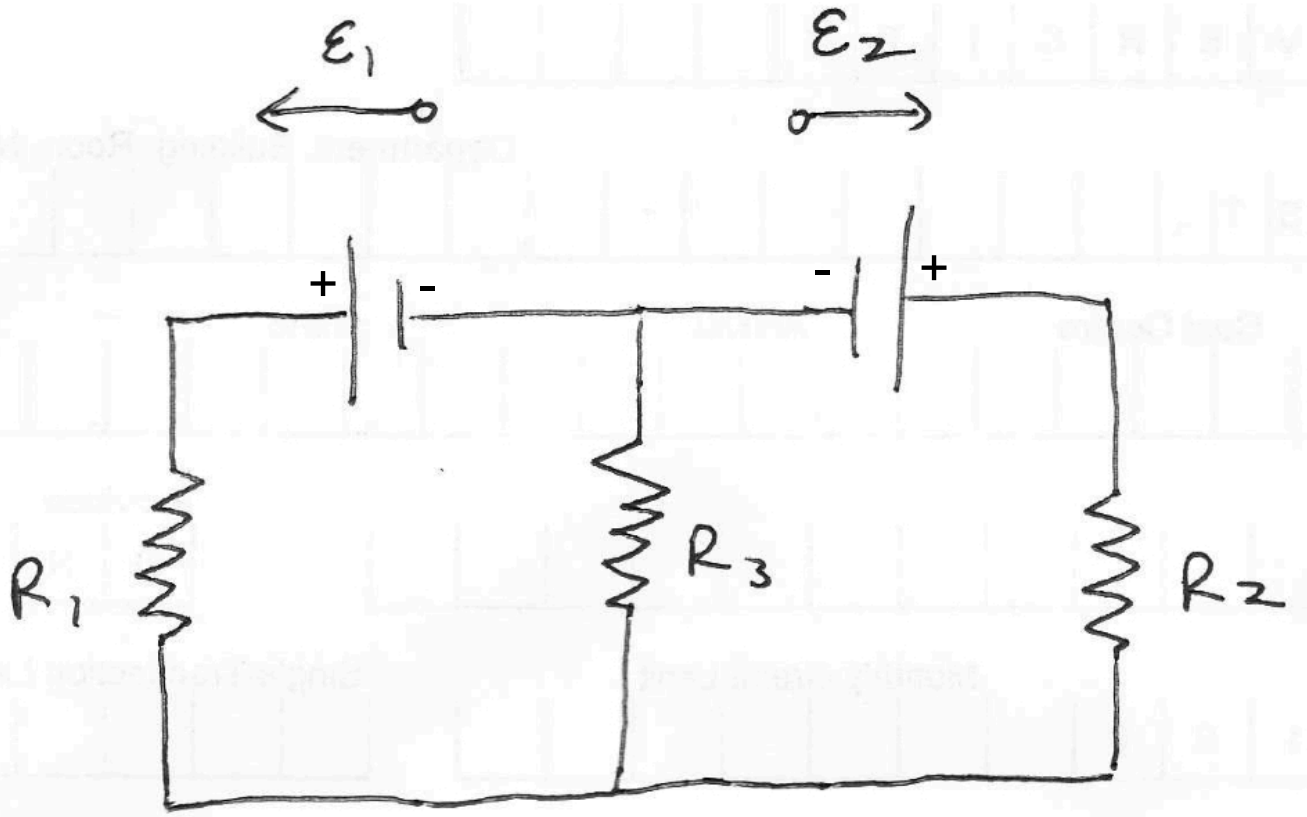

Kirchoff's Laws

[ex] Use the ~~[illegible]~~ to determine the currents I_1, I_2 and I_3

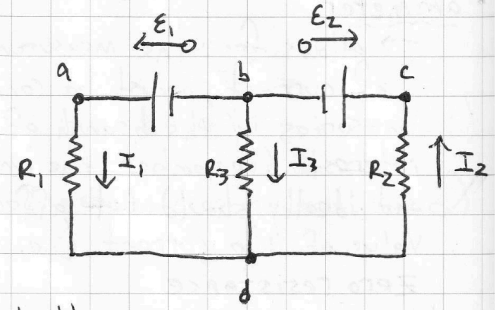

NOTE: we arbitrarily chose the direction of the currents. This provides a reference and the ultimate direction of the current should correctly emerge from our solution

make sure to correctly keep track of your chosen ref. direction!

Left loop: $\mathcal{E}_1 - I_1 R_1 + I_3 R_3 = 0$

Right loop: $-I_3 R_3 - I_2 R_2 - \mathcal{E}_2 = 0$

(NOTE that we went counter-clockwise through both loops)

Junction rule: $I_1 + I_3 - I_2 = 0$
(say, at point d)

→ Now we have three eqns. w/ three unknowns. Algebraically we can solve for the currents in terms of the resistances and potential diffs.

$$I_1 = \frac{\mathcal{E}_1(R_2+R_3) - \mathcal{E}_2 R_3}{R_1R_2 + R_2R_3 + R_1R_3}$$

$$I_2 = \frac{\mathcal{E}_1 R_3 - \mathcal{E}_2(R_1+R_3)}{R_1R_2 + R_2R_3 + R_1R_3}$$

$$I_3 = \frac{-\mathcal{E}_1 R_2 - \mathcal{E}_2 R_1}{R_1R_2 + R_2R_3 + R_1R_3}$$

NOTE: $I_3 < 0$
(so we chose the ref. direction wrong no matter what $\mathcal{E}$ and R values are!)

RLC Circuits as an example

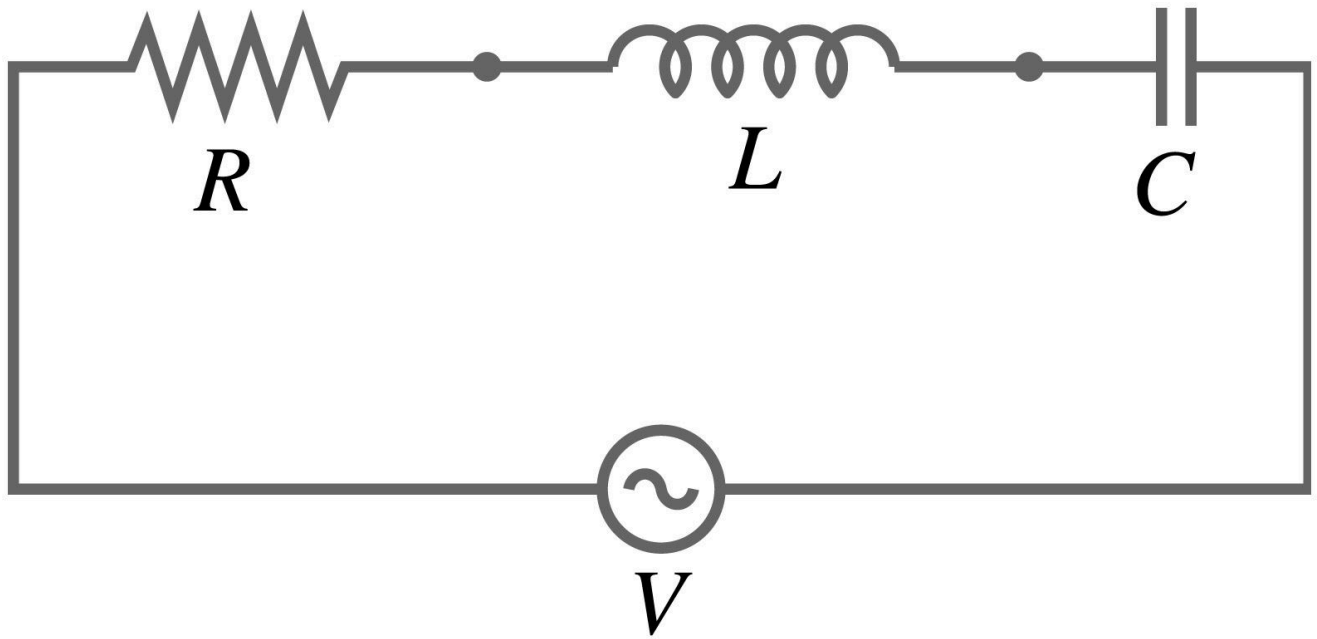

RLC circuit = Damped, Driven Harmonic Oscillator