# **Biophysics I** (BPHS 3090)

Instructors: Prof. Christopher Bergevin (cberge@yorku.ca)

Website: http://www.yorku.ca/cberge/3090W2015.html

York University
Winter 2015
Lecture 15

Reference/Acknowledgement:
- TF Weiss (Cellular Biophysics)
- D Freeman

## Steady-State Electrodiffusion through Membranes

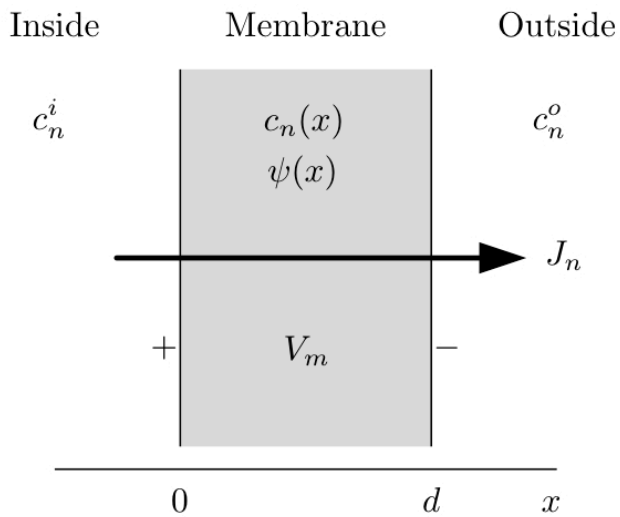


Steady-state

$$\rightarrow \quad \frac{\partial c_n(x,t)}{\partial t} = 0$$

$$\rightarrow \quad \frac{\partial J_n(x,t)}{\partial x} = 0$$

$$\rightarrow \quad J_n = \text{constant}$$

$$J_n = G_n(V_m - V_n)$$

Nernst Equilibrium Potential

$$V_n = \frac{RT}{z_n F} \ln \frac{c_n(d)}{c_n(0)} = \frac{RT}{z_n F} \ln \frac{c_n^o}{c_n^i}$$

$$G_n = \frac{1}{\displaystyle\int_o^d \frac{dx}{u_n z_n^2 F^2 c_n(x)}} \geq 0$$

## Model of Steady-State Electrodiffusion through Membranes

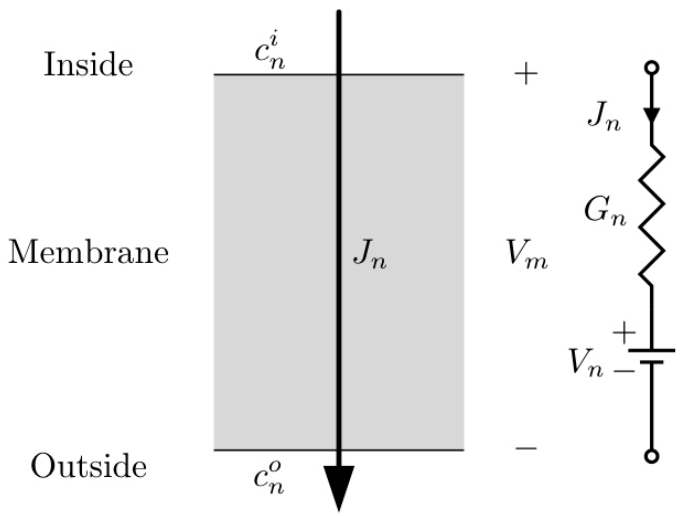


$$J_n = G_n(V_m - V_n)$$

$$\boxed{\begin{array}{l} \text{if } V_m - V_n > 0, \text{ then } J_n > 0 \\ \text{if } V_m - V_n < 0, \text{ then } J_n < 0 \end{array}}$$

direction of current

$$\text{Nernst Equilibrium Potential } V_n = \frac{RT}{z_n F} \ln \frac{c_n^o}{c_n^i}$$

$$\text{Electrical Conductivity } G_n = \frac{1}{\displaystyle\int_o^d \frac{dx}{u_n z_n^2 F^2 c_n(x)}} \geq 0$$

$$V_n = \frac{RT}{z_n F} \ln\left(\frac{c_n^o}{c_n^i}\right) = \frac{RT}{z_n F \log_{10} e} \log_{10}\left(\frac{c_n^o}{c_n^i}\right)$$

$$\frac{RT}{z_n F \log_{10} e}$$ ~ 59 mV

(for $z_n$=+1, room temp.)

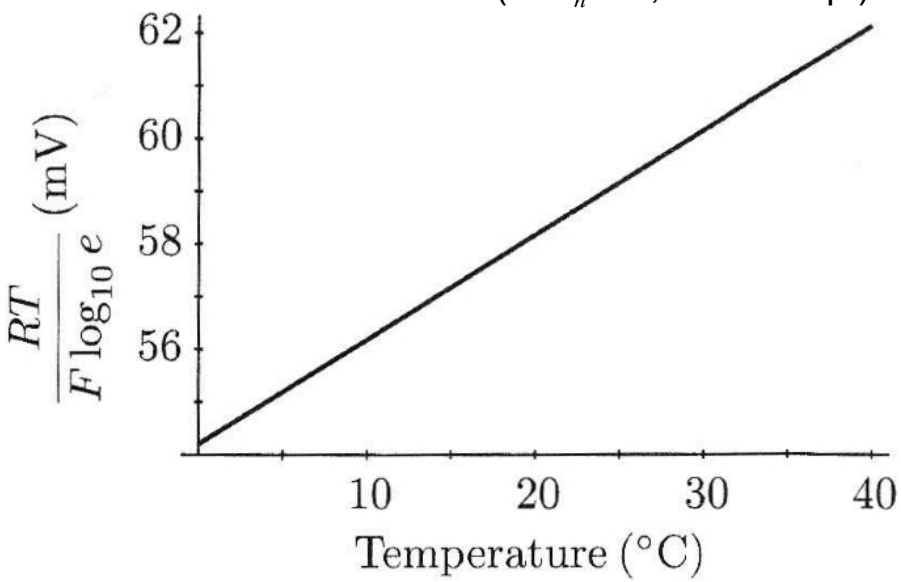


→ Temperature-dependence can affect things by several mV

**Figure 7.15** Variation with temperature of the factor $RT/(F \log_{10} e)$.

Resting Potential: Model considering only a *single permeant ion*

Inside cell: high [K+], low [Na+]
Outside cell: low [K+], high [Na+]

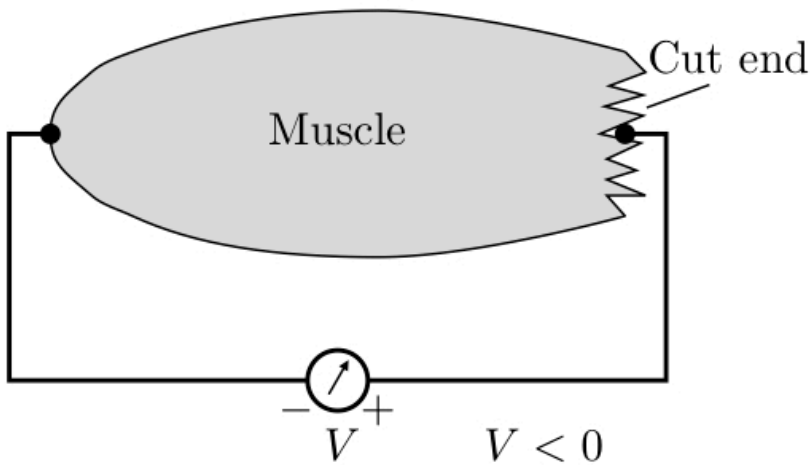


Figure 7.17

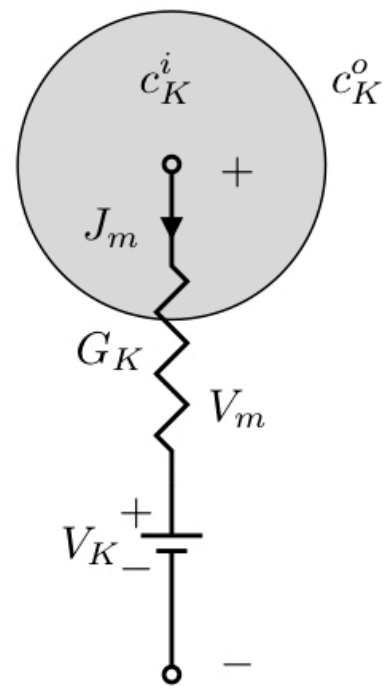


Figure 7.18

→ Bernstein's idea (1902) was that membrane was permeable to potassium only, thereby $K^+$ determined resting potential

Resting Potential: Model considering only a *single permeant ion*

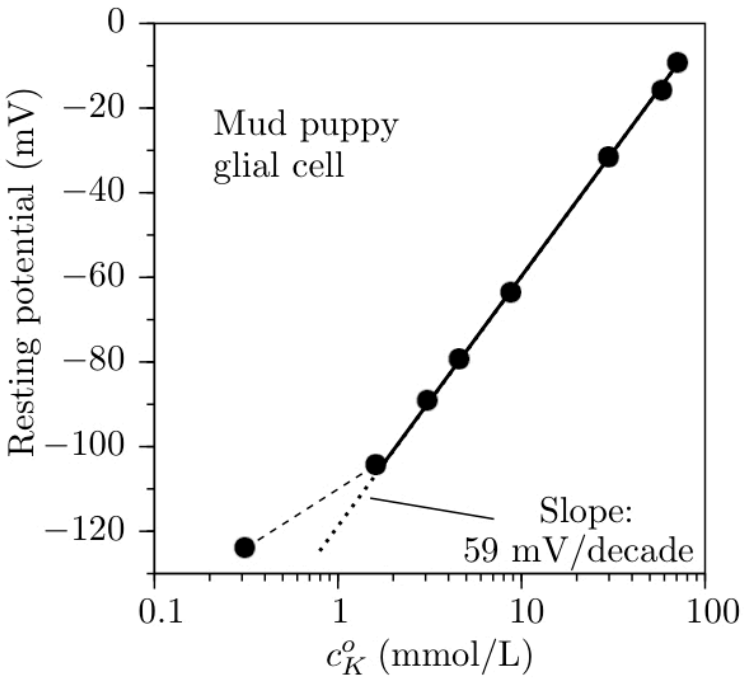


Figure 7.21

→ Model does a decent job, but deviations apparent (e.g., low $c_K$, $Na^+$ does matter)

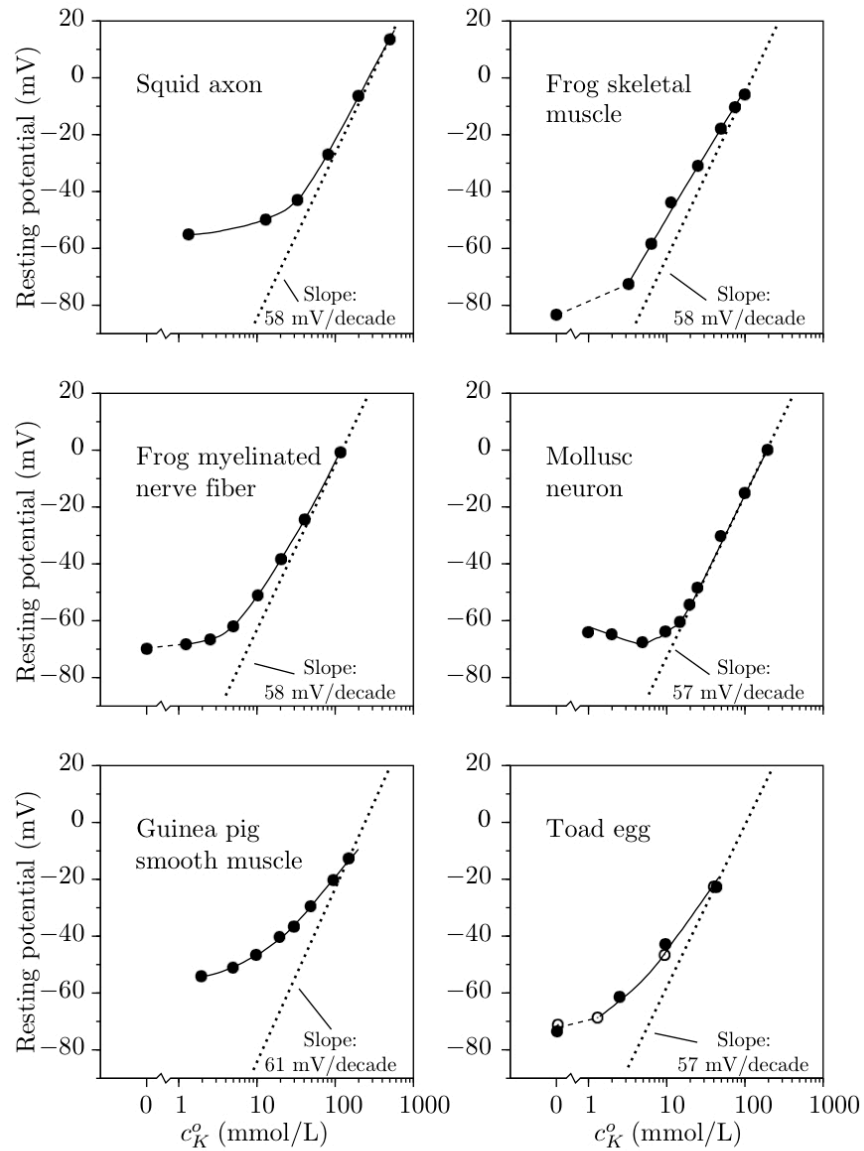


Figure 7.22

Resting Potential: Model considering only a ***multiple*** *permeant ions*

→ What if different ions are able to diffuse?

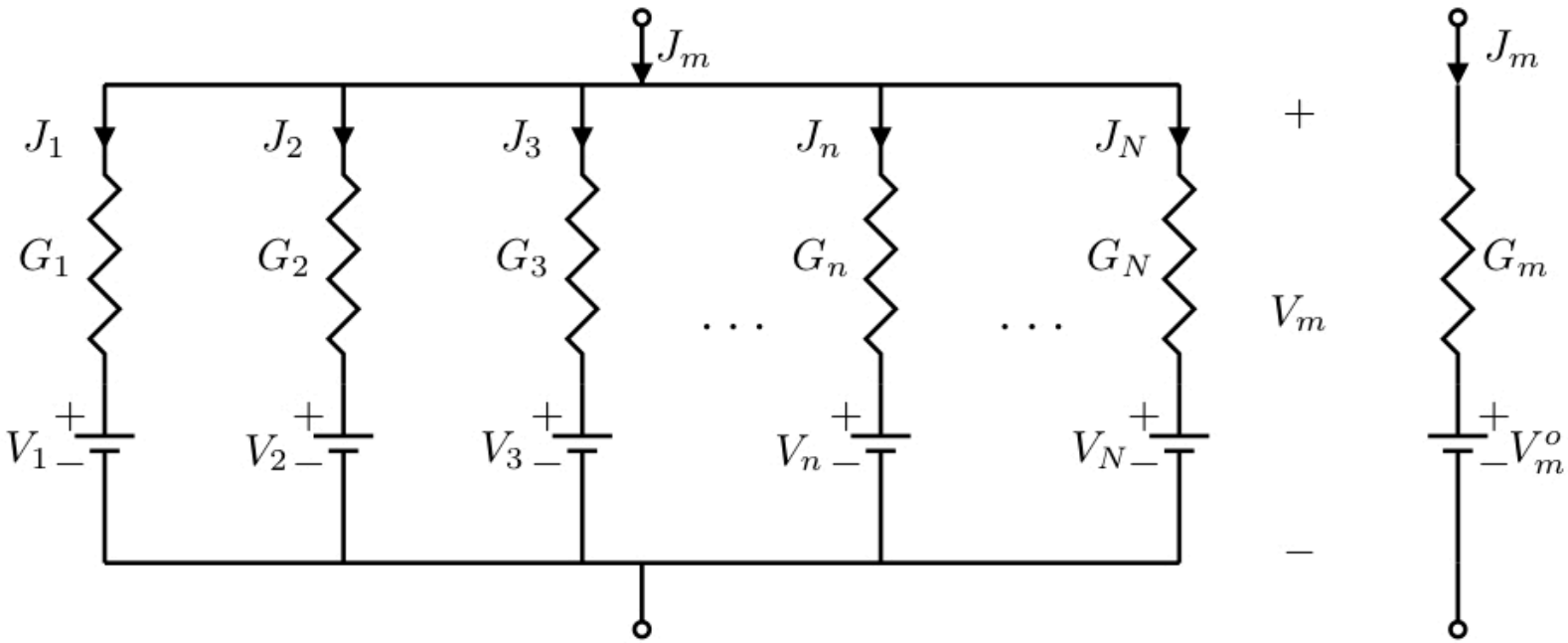


Figure 7.24

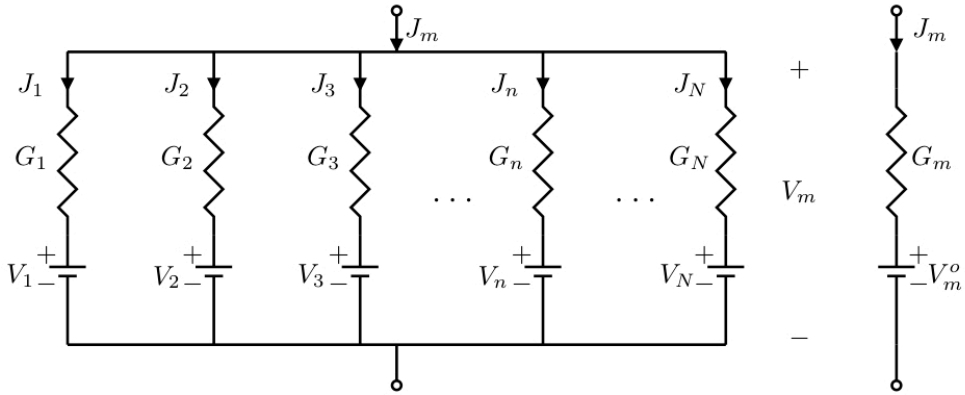


Figure 7.24

<u>At electrodiffusive equilibrium...</u> (i.e., zero current densities concurrently)

$$\frac{RT}{z_1 F}\ln\left(\frac{c_1^o}{c_1^i}\right) = \frac{RT}{z_2 F}\ln\left(\frac{c_2^o}{c_2^i}\right) = \cdots = \frac{RT}{z_n F}\ln\left(\frac{c_n^o}{c_n^i}\right)$$

Nernst potentials must be equal

$$\left(\frac{c_1^o}{c_1^i}\right)^{1/z_1} = \left(\frac{c_2^o}{c_2^i}\right)^{1/z_2} = \cdots = \left(\frac{c_n^o}{c_n^i}\right)^{1/z_n}$$

Possible concentrations are constrained!

e.g., $c_K^o/c_K^i = c_{Cl}^i/c_{Cl}^o$ or that $c_K^o c_{Cl}^o = c_K^i c_{Cl}^i$

Donnan relation

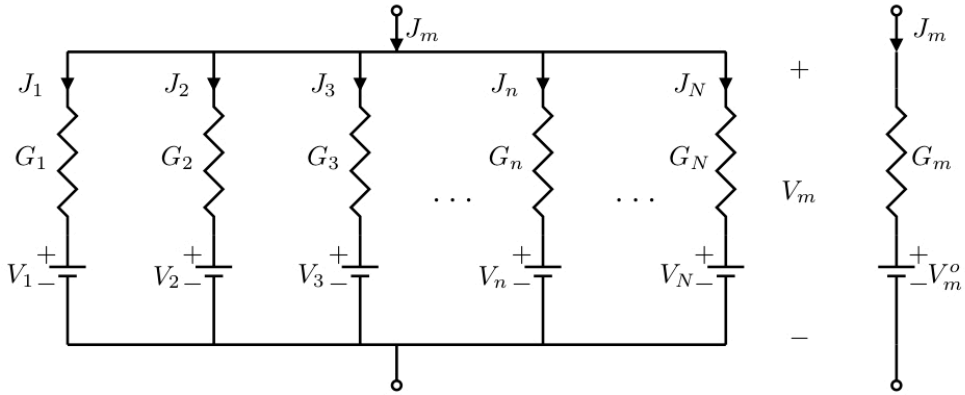


Figure 7.24

<u>More general case</u>

$$J_m = \sum_n J_n$$

total membrane current is sum of all permeant charged species

→ $$J_m = \sum_n G_n (V_m - V_n)$$

$$\sum_n G_n (V_m^o - V_n) = 0$$

'resting state' condition such that membrane potential is const. (i.e., no net charge entering/leaving cell)

$$V_m^o = \sum_n \frac{G_n}{G_m} V_n$$

where $G_m = \sum_n G_n$

(total conductance per unit area of membrane)

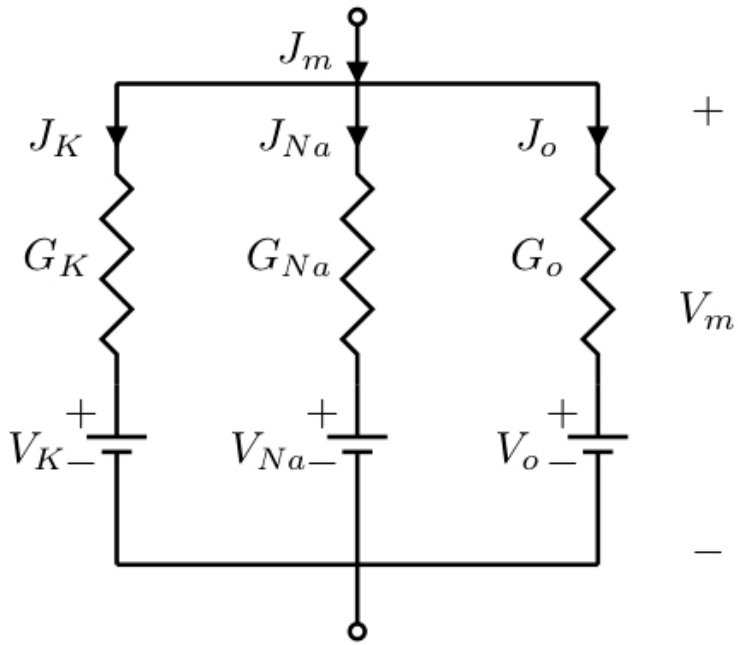


Model with three relevant "paths":
1.$K^+$
2.Na+
3.Other/Leakage (e.g., $Cl^-$, $Ca^{++}$)

$$V_m^o = \sum_n \frac{G_n}{G_m} V_n$$

| Ion | $G_n$ (S/cm$^2$) | $G_n/G_m$ | $c_n^o/c_n^i$ | $V_n$ (mV) |
|---|---|---|---|---|
| $K^+$ | $3.7 \times 10^{-4}$ | 0.55 | 0.05 | −72 |
| $Na^+$ | $1 \times 10^{-5}$ | 0.016 | 9.8 | +55 |
| leakage | $3.0 \times 10^{-4}$ | 0.44 | — | −49 |

'resting' values for squid giant axon (determined empirically)

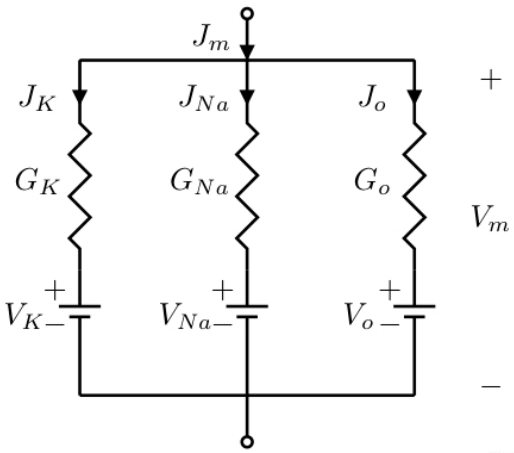


| Ion | $G_n$ (S/cm$^2$) | $G_n/G_m$ | $c_n^o/c_n^i$ | $V_n$ (mV) |
|---|---|---|---|---|
| $K^+$ | $3.7 \times 10^{-4}$ | 0.55 | 0.05 | −72 |
| $Na^+$ | $1 \times 10^{-5}$ | 0.016 | 9.8 | +55 |
| leakage | $3.0 \times 10^{-4}$ | 0.44 | — | −49 |

$$V_m^o = \frac{RT}{F}\left(\frac{G_K}{G_m}\right)\ln\left(\frac{c_K^o}{c_K^i}\right) + \sum_{n \neq K} \frac{G_n}{G_m} V_n$$

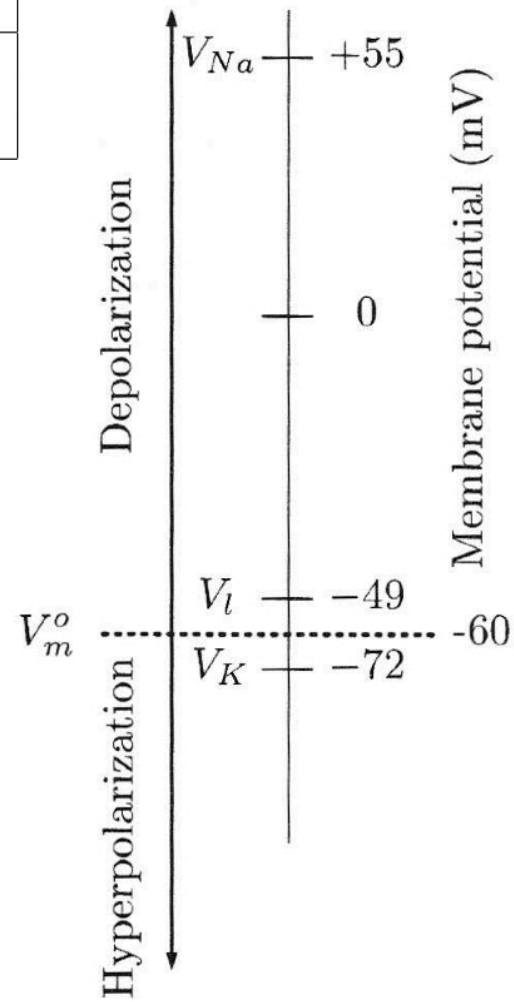


Figure 7.27

K+ contribuition?

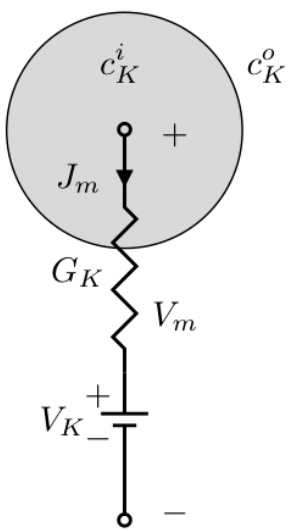


Figure 7.18

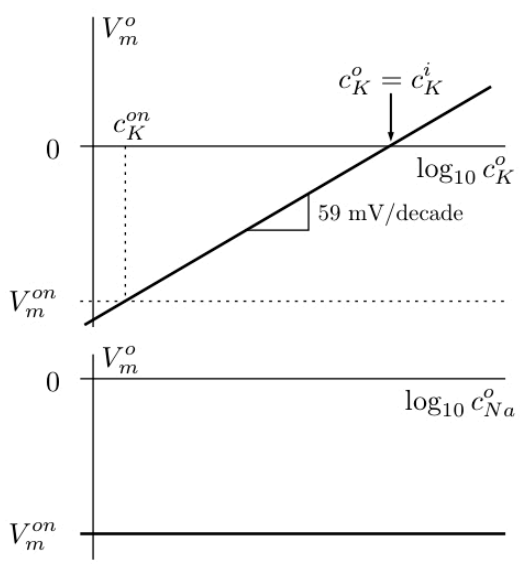


Figure 7.19

→ Multiple ion model seems to take us one step closer, but still doesn't explain everything....

## $K^+$ contribuition?

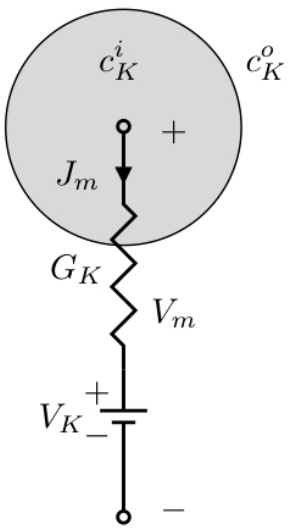


Figure 7.18

$$V_m^o = \frac{RT}{F}\left(\frac{G_K}{G_m}\right)\ln\left(\frac{c_K^o}{c_K^i}\right) + \sum_{n\neq K}\frac{G_n}{G_m}V_n$$

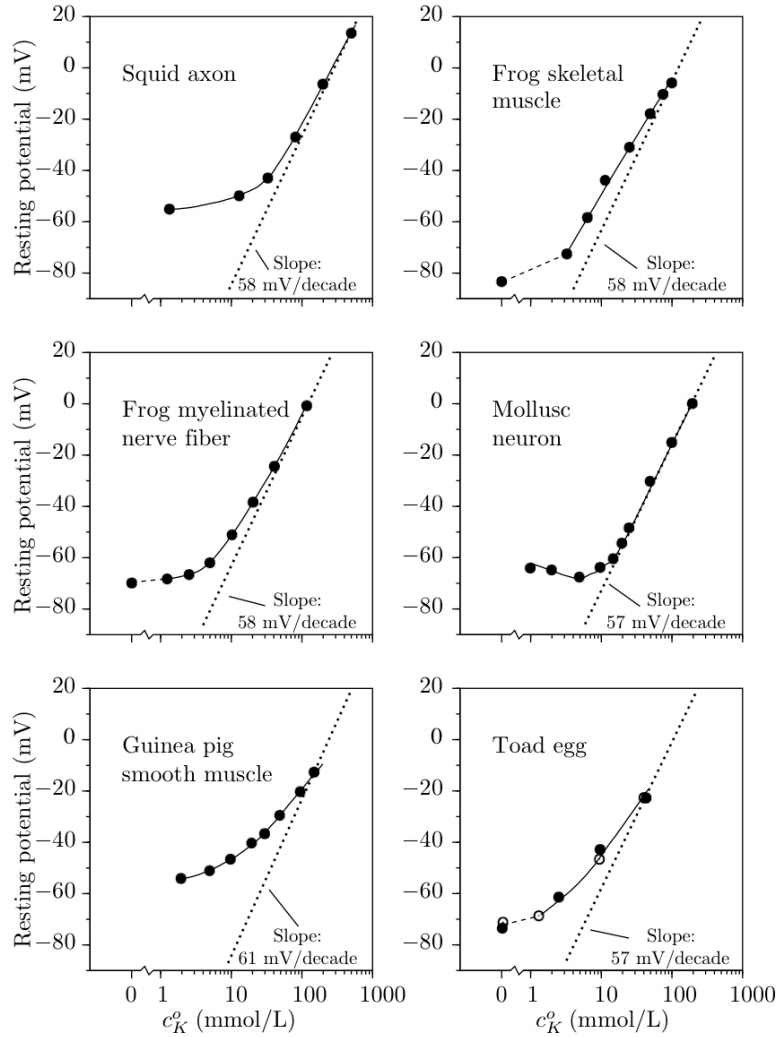


Figure 7.22

→ Chief issue is deviations at lower $K^+$ concentrations (i.e., saturation in resting potential)

What if conductances were voltage-dependent?

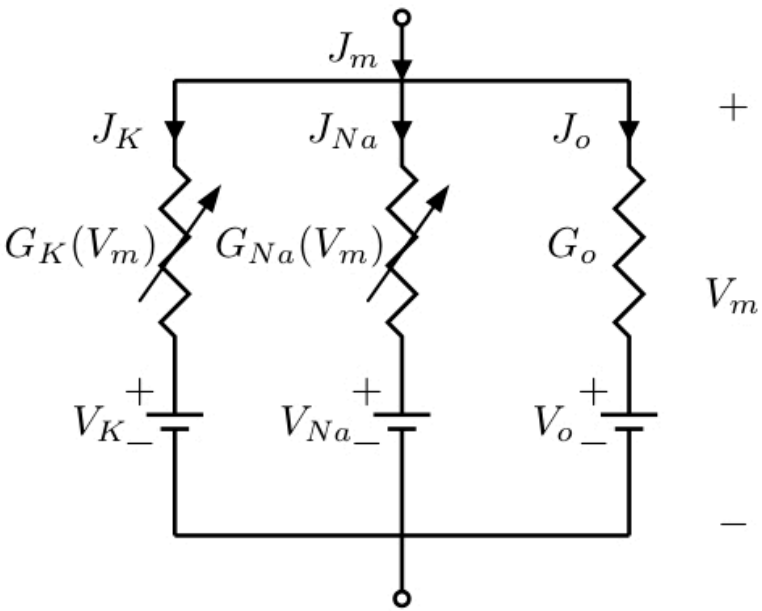


Figure 7.32

i.e., voltage-gated ion channels
(more detail in vol.2 ch.6)

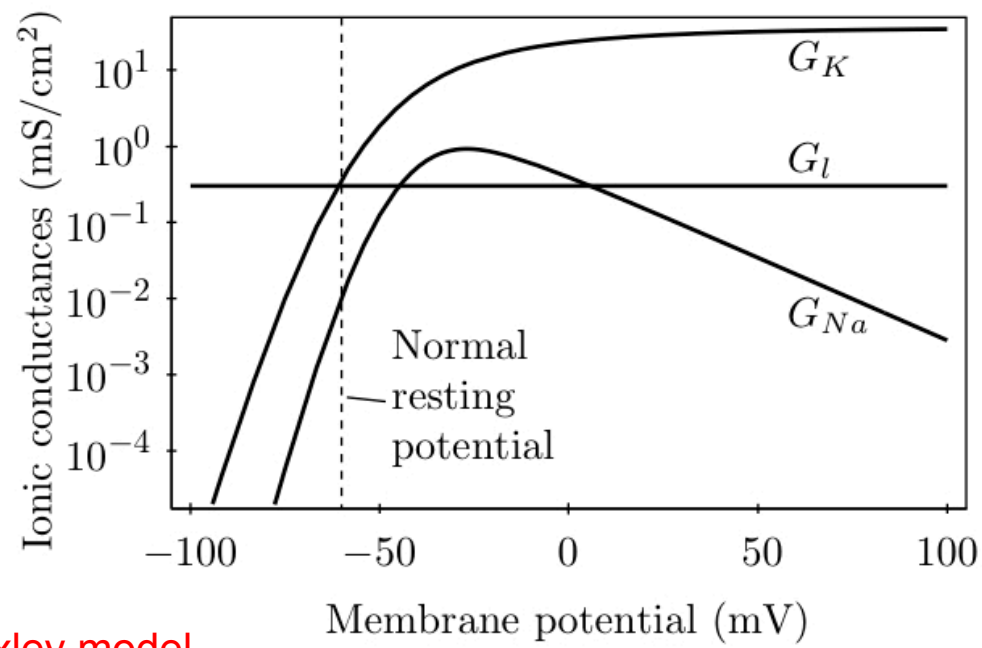


Hodgkin-Huxley model
conductances

Figure 7.28

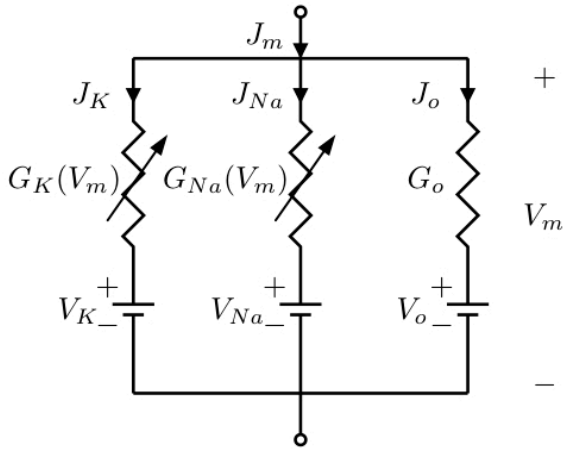


Figure 7.32

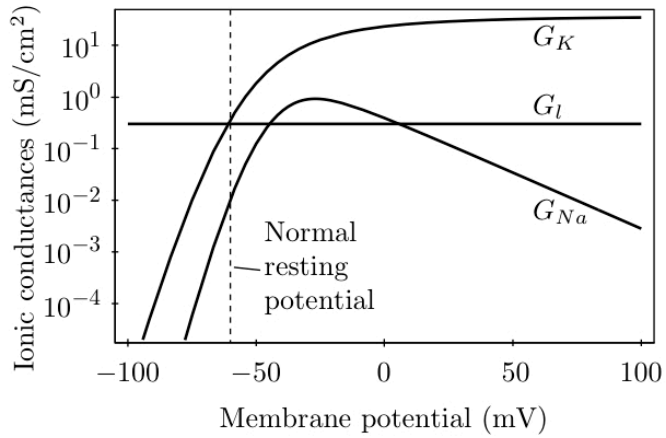


Figure 7.28

$$\sum_n G_n(V_m^o - V_n) = 0$$

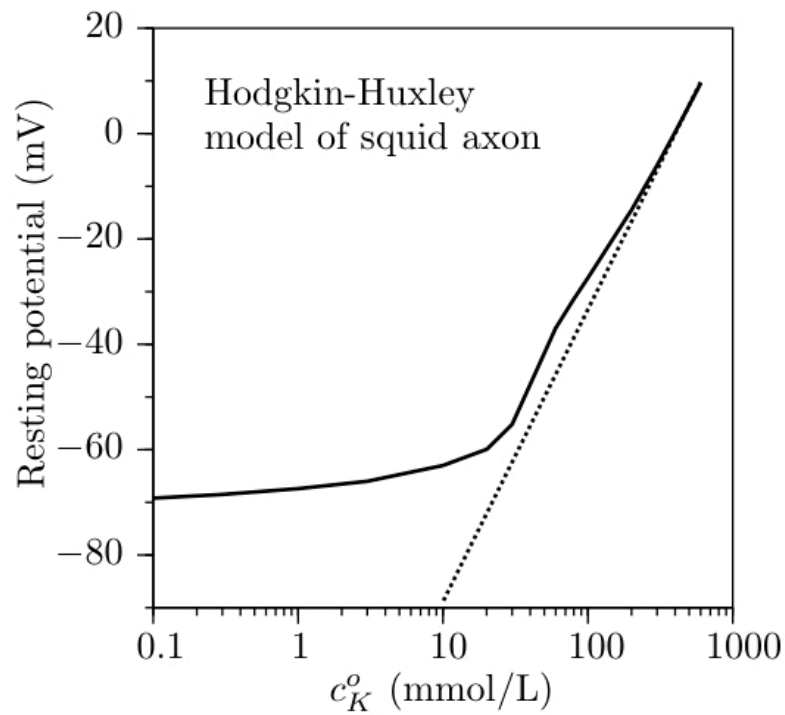


Figure 7.29