Biophysics I (BPHS 3090)

Instructors: Prof. Christopher Bergevin (cberge@yorku.ca)

Website: http://www.yorku.ca/cberge/3090W2015.html

York University
Winter 2015
Lecture 23

Reference/Acknowledgement:
- TF Weiss (Cellular Biophysics)
- D Freeman

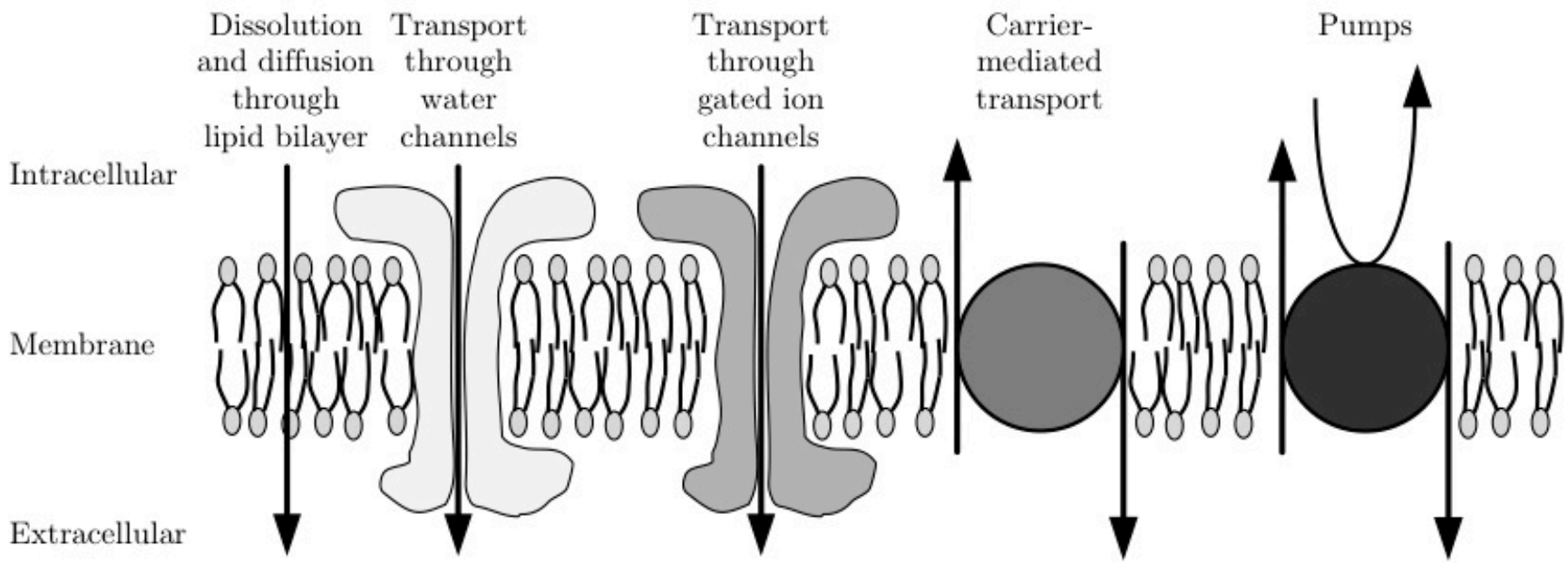
Dissolution and diffusion through lipid bilayer
Transport through water channels
Transport through gated ion channels
Carrier-mediated transport
Pumps
Intracellular
Membrane
Extracellular

Figure 2.19

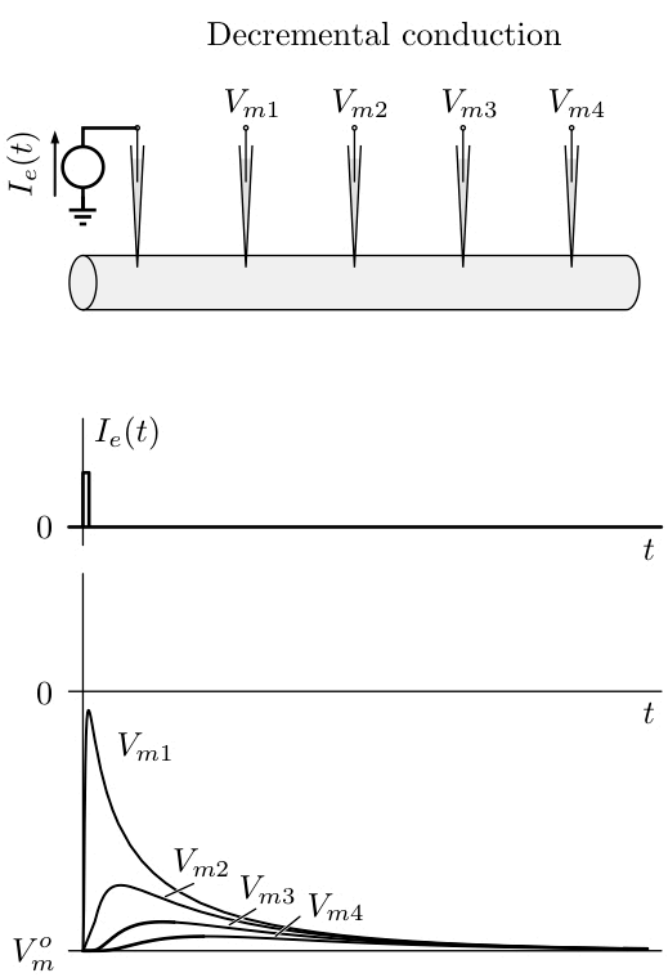

Electrically inexcitable cell

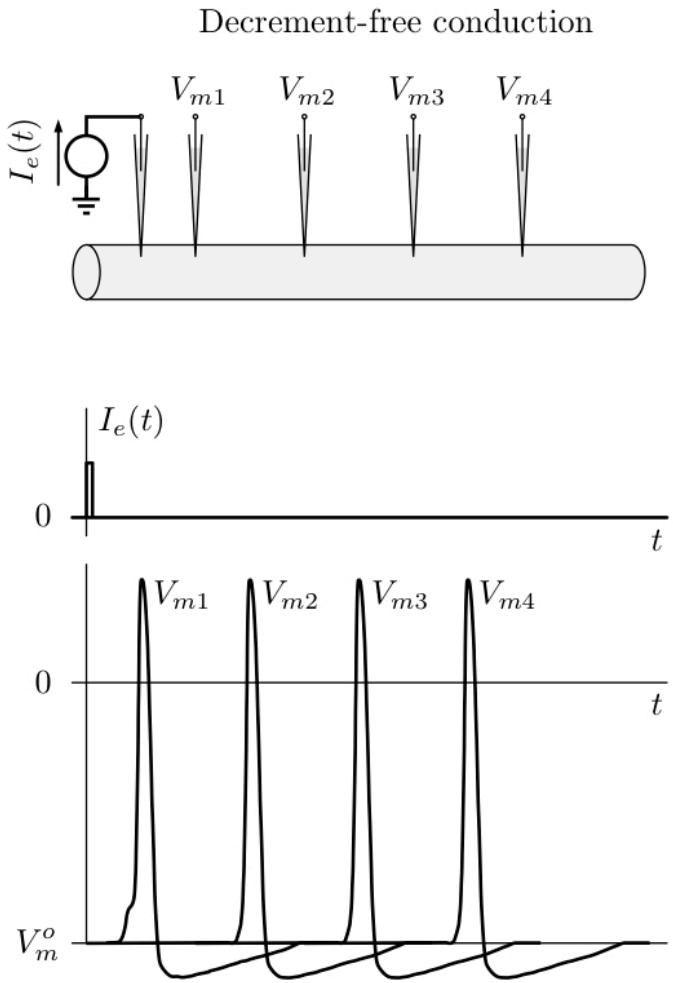

Electrically excitable cell

→ What (biophysically) distinguishes between these two?

Looking Ahead....

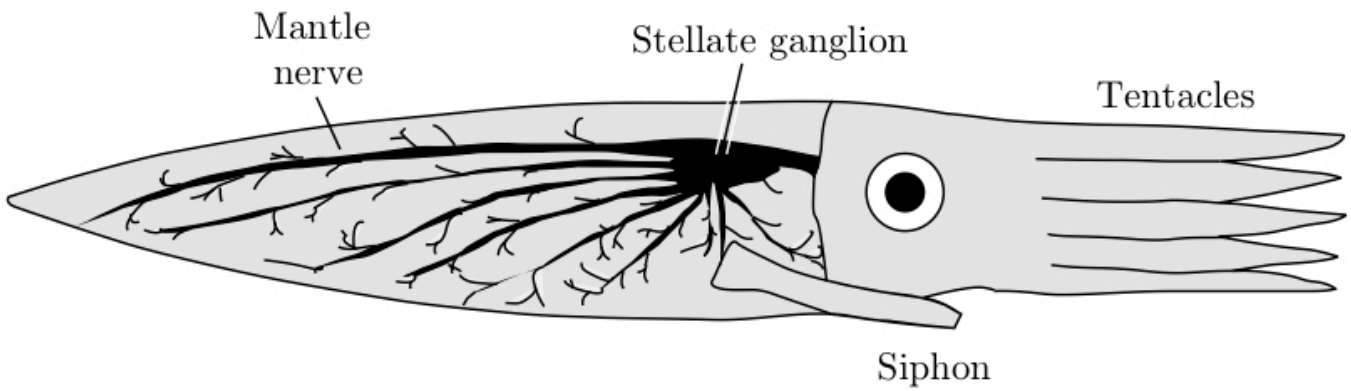

Figure 1.28

Hodgkin Huxley model

Variable Na+ and K+ conductances

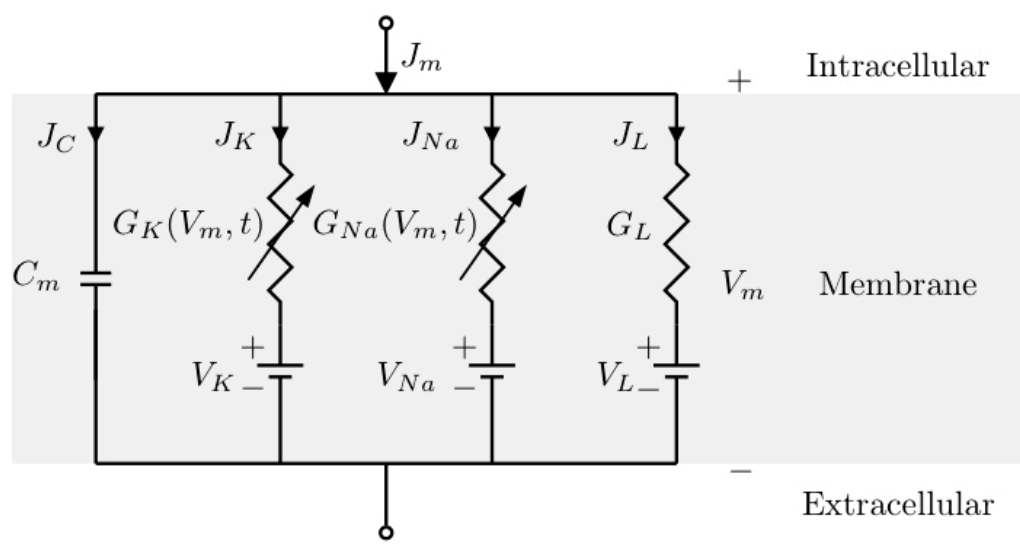

Looking Ahead....

$$J_m = C_m \frac{\partial V_m}{\partial t} + G_K(V_m, t)\,(V_m - V_K)$$
$$+ G_{Na}(V_m, t)\,(V_m - V_{Na}) + G_L(V_m - V_L)$$

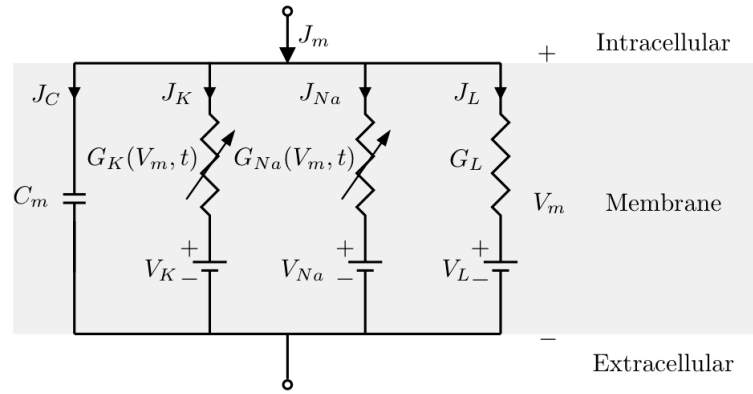

Figure 4.6

Nernst Potentials

$$V_{Na} = \frac{RT}{F} \log \frac{c^o_{Na}}{c^i_{Na}} \qquad V_K = \frac{RT}{F} \log \frac{c^o_K}{c^i_K}$$

$$\frac{1}{2\pi a(r_o + r_i)} \frac{\partial^2 V_m}{\partial z^2} = C_m \frac{\partial V_m}{\partial t} + G_K(V_m, t)\,(V_m - V_K)$$
$$+ G_{Na}(V_m, t)\,(V_m - V_{Na}) + G_L(V_m - V_L)$$

Combine w/ Core-Conductor & Cable models

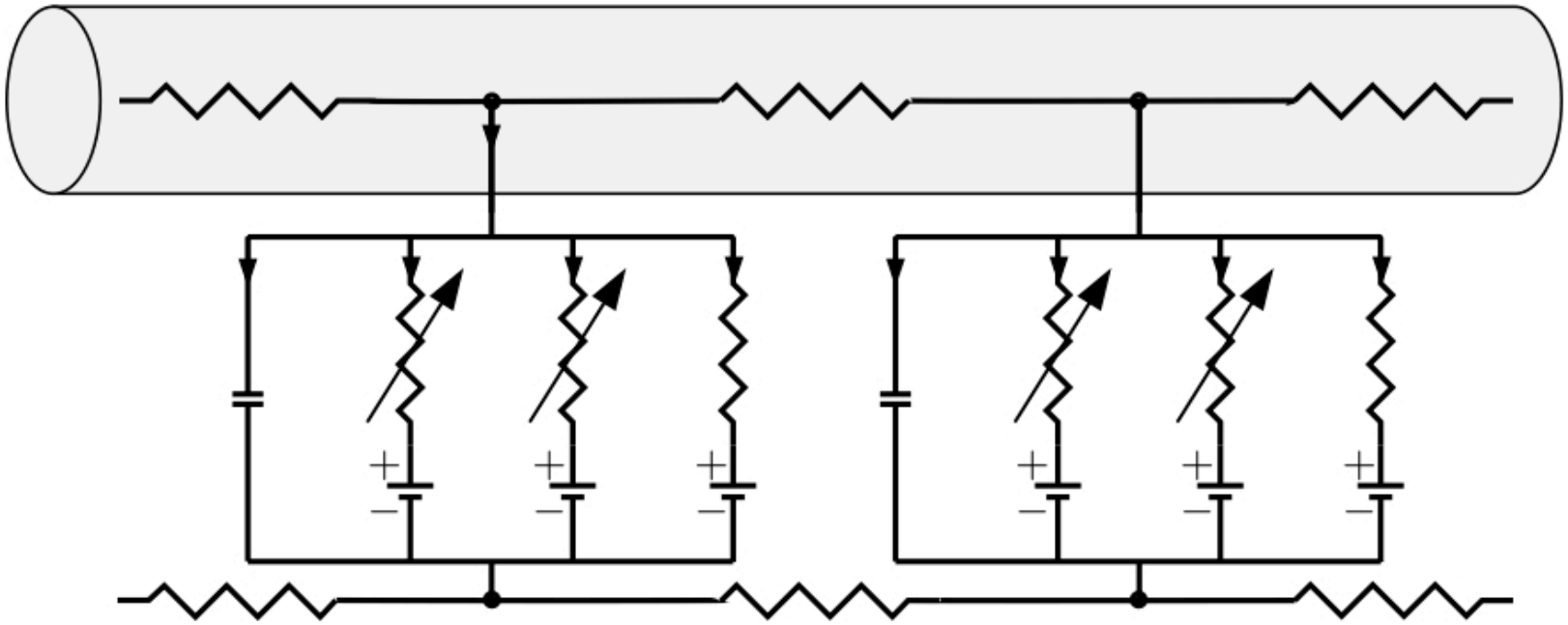

Figure 4.7

Looking Ahead....

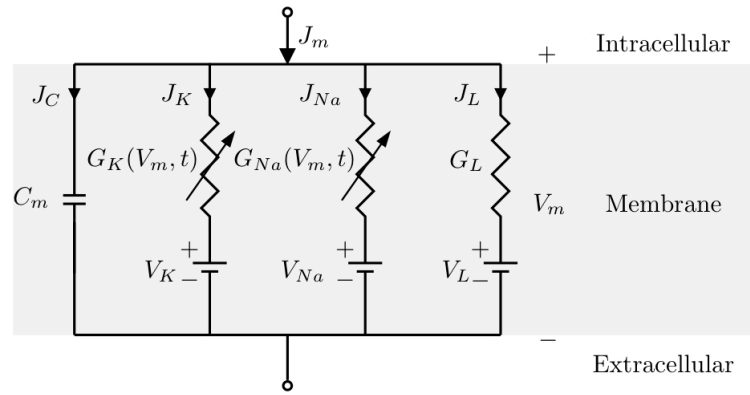

Figure 4.6

$$\frac{1}{2\pi a(r_o + r_i)}\frac{\partial^2 V_m}{\partial z^2} = C_m\frac{\partial V_m}{\partial t} + G_K(V_m,t)\,(V_m - V_K)$$
$$+ G_{Na}(V_m,t)\,(V_m - V_{Na}) + G_L(V_m - V_L)$$

→ What are $G_K(V_m,t)$ and $G_{Na}(V_m,t)$?

$$G_K(V_m,t) = \overline{G}_K n^4(V_m,t)$$
$$G_{Na}(V_m,t) = \overline{G}_{Na} m^3(V_m,t) h(V_m,t)$$
$$n(V_m,t) + \tau_n(V_m)\frac{dn(V_m,t)}{dt} = n_\infty(V_m)$$
$$m(V_m,t) + \tau_m(V_m)\frac{dm(V_m,t)}{dt} = m_\infty(V_m)$$
$$h(V_m,t) + \tau_h(V_m)\frac{dh(V_m,t)}{dt} = h_\infty(V_m)$$

This gets to the heart of the Hodgkin-Huxley model as we'll see.....

Finally there was the difficulty of computing the action potentials from the equations which we had developed. We had settled all the equations and constants by March 1951 and hoped to get these solved on the Cambridge University computer. However, before anything could be done we learnt that the computer would be off the air for 6 months or so while it underwent a major modification. Andrew Huxley got us out of that difficulty by solving the differential equations numerically using a hand-operated Brunsviga. The propagated action potential took about three weeks to complete and must have been an enormous labour for Andrew. But it was exciting to see it come out with the right shape and velocity and we began to feel that we had not wasted the many months that we had spent in analysing records.

—Hodgkin, 1977

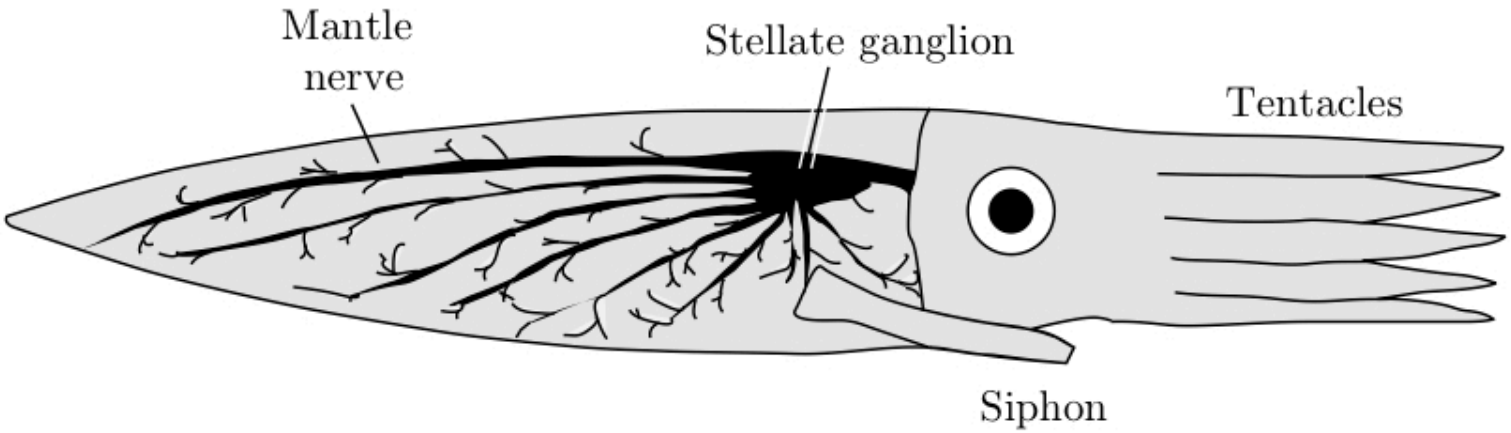

Figure 1.28

Some key observations...

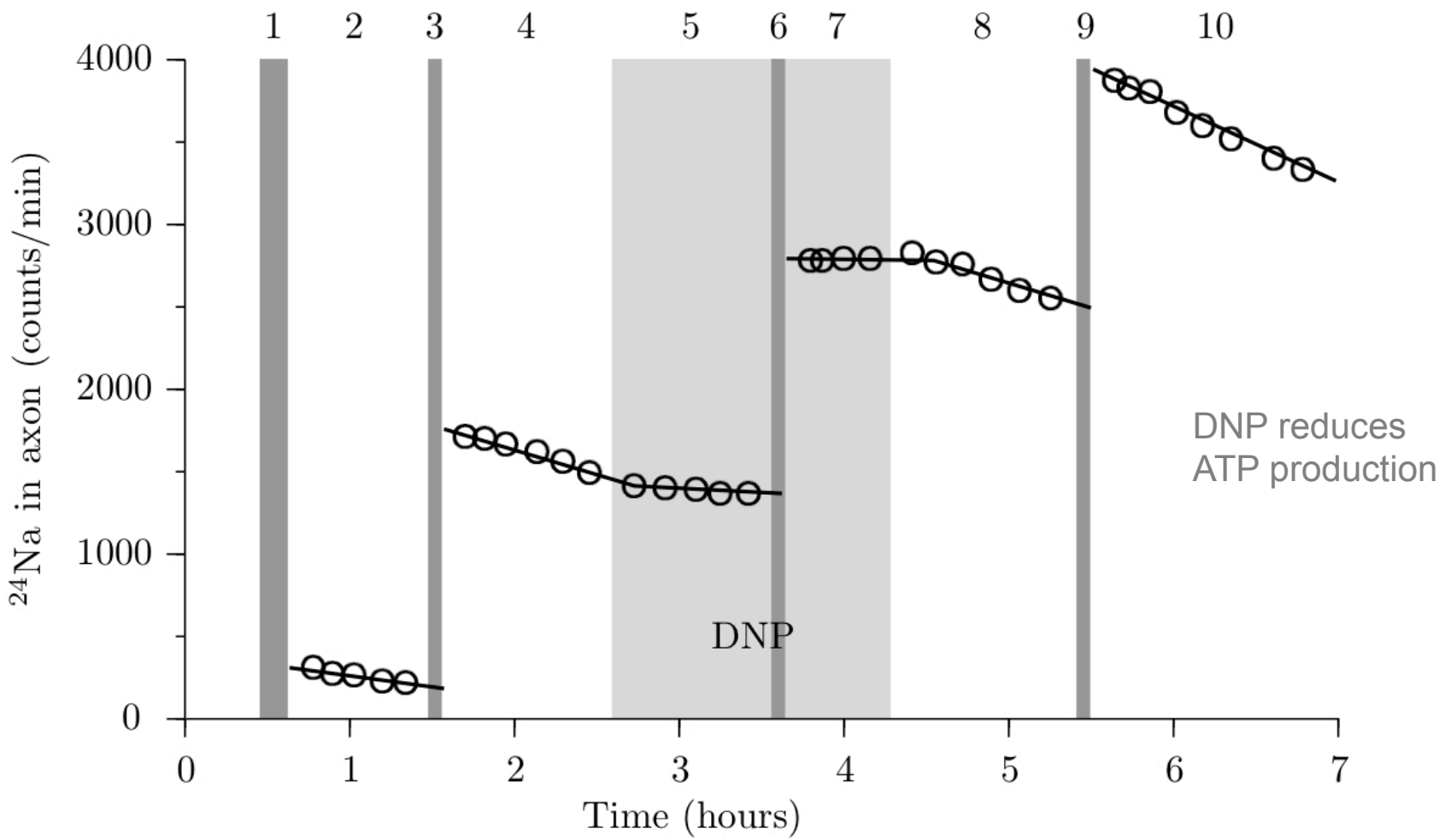

Figure 7.38

Interrelationships between:
Na^+ flux, 'active' transport, & action potentials

→ Active transport not a priori required for AP generation

Some key observations...

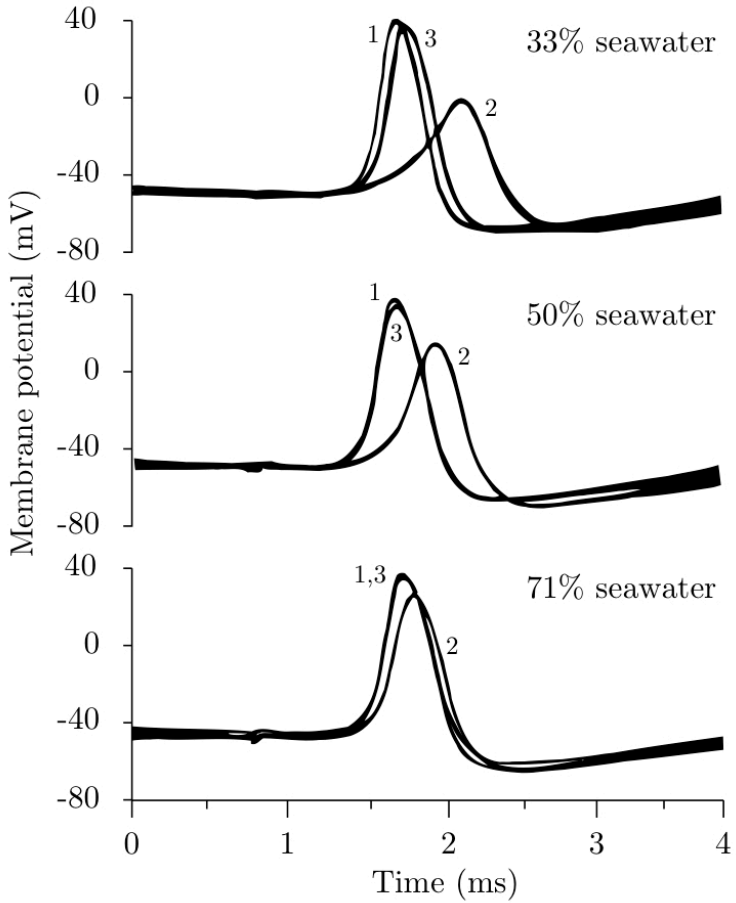

Figure 4.2

→ Na^+ flux affects APs (*early on*)

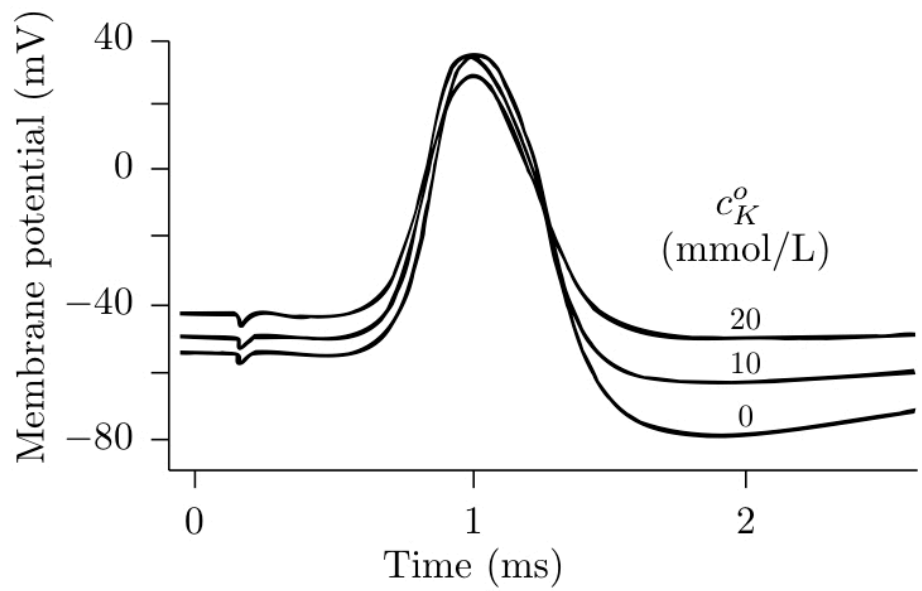

Figure 4.5

→ K^+ flux affects APs (*later on*)

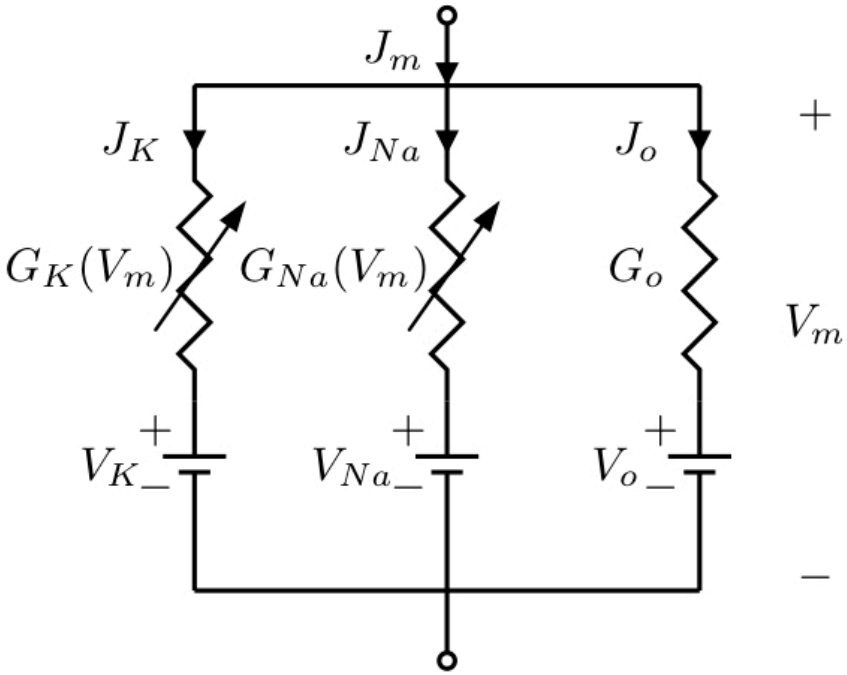

Figure 7.32

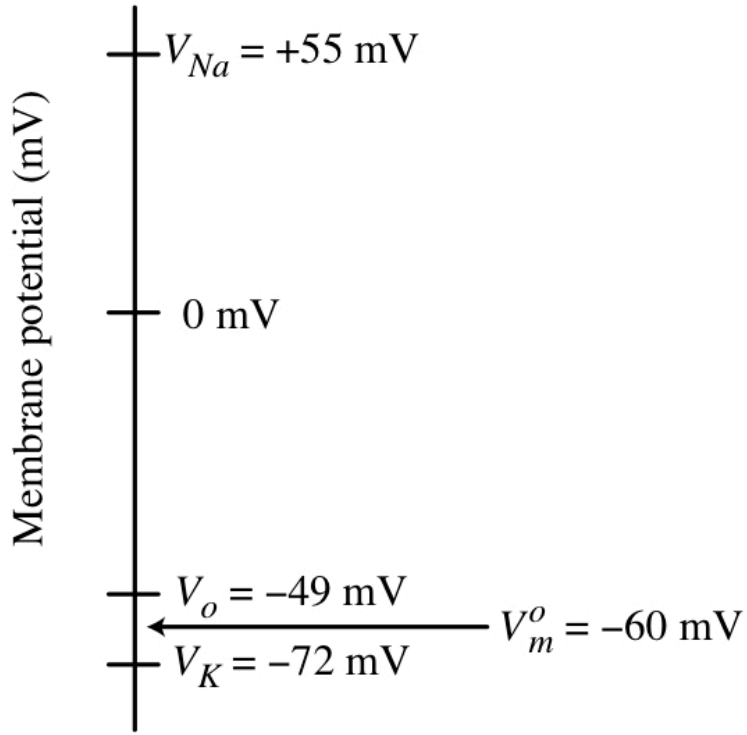

Idea 1 – Multiple permeant ions with different conductance (e.g., $G_k >> G_{Na}$)

Idea 2 – K+ and Na+ conductances can vary time

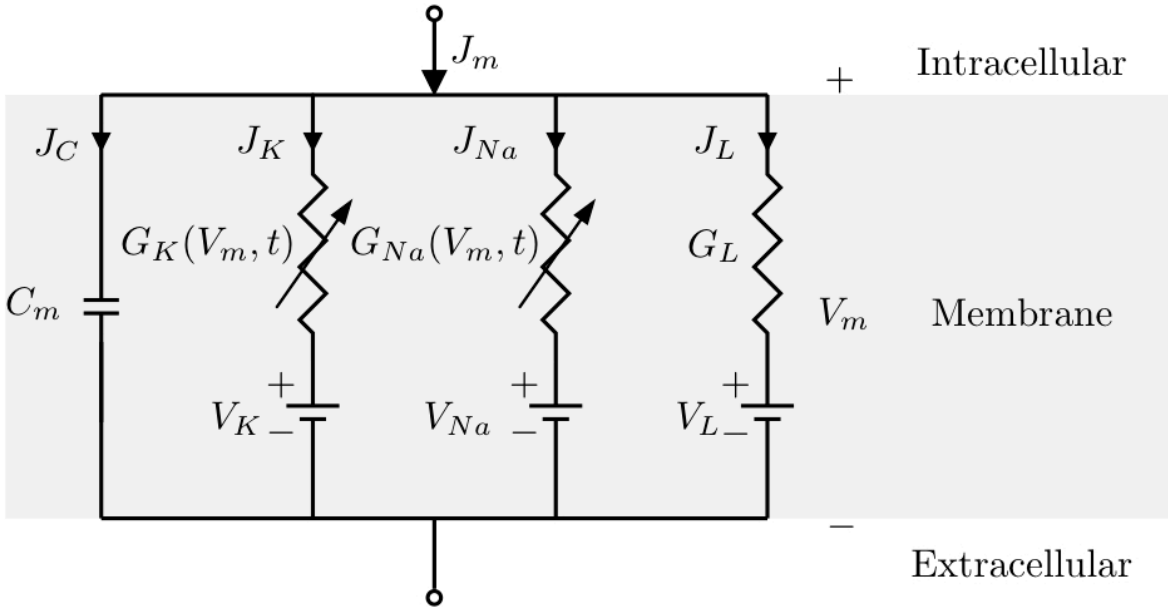

Figure 4.6

What are $G_K(V_m,t)$ and $G_{Na}(V_m,t)$?

→ Not easy to empirically distinguish, so new electrophysiological techniques were required

Space-Clamp

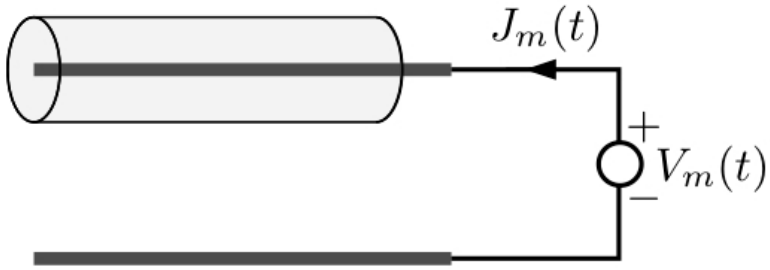

Figure 4.10

Kenneth Cole & George Marmont (1940s)

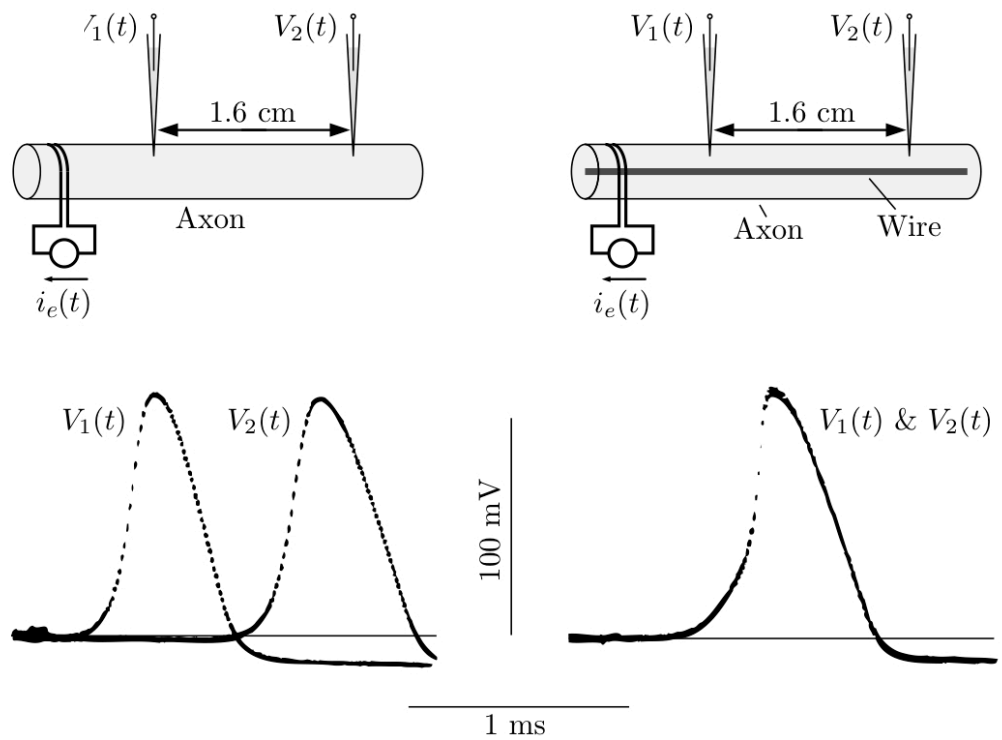

Figure 2.15

→ *Eliminates spatial dependence*
(i.e., make an electrically large cell a small one)

Conduction velocity
(Core-Conductor model)

$$r_i = \frac{\rho_i}{\pi a^2} \qquad \nu = \sqrt{\frac{K_m a}{2\rho_i}}$$

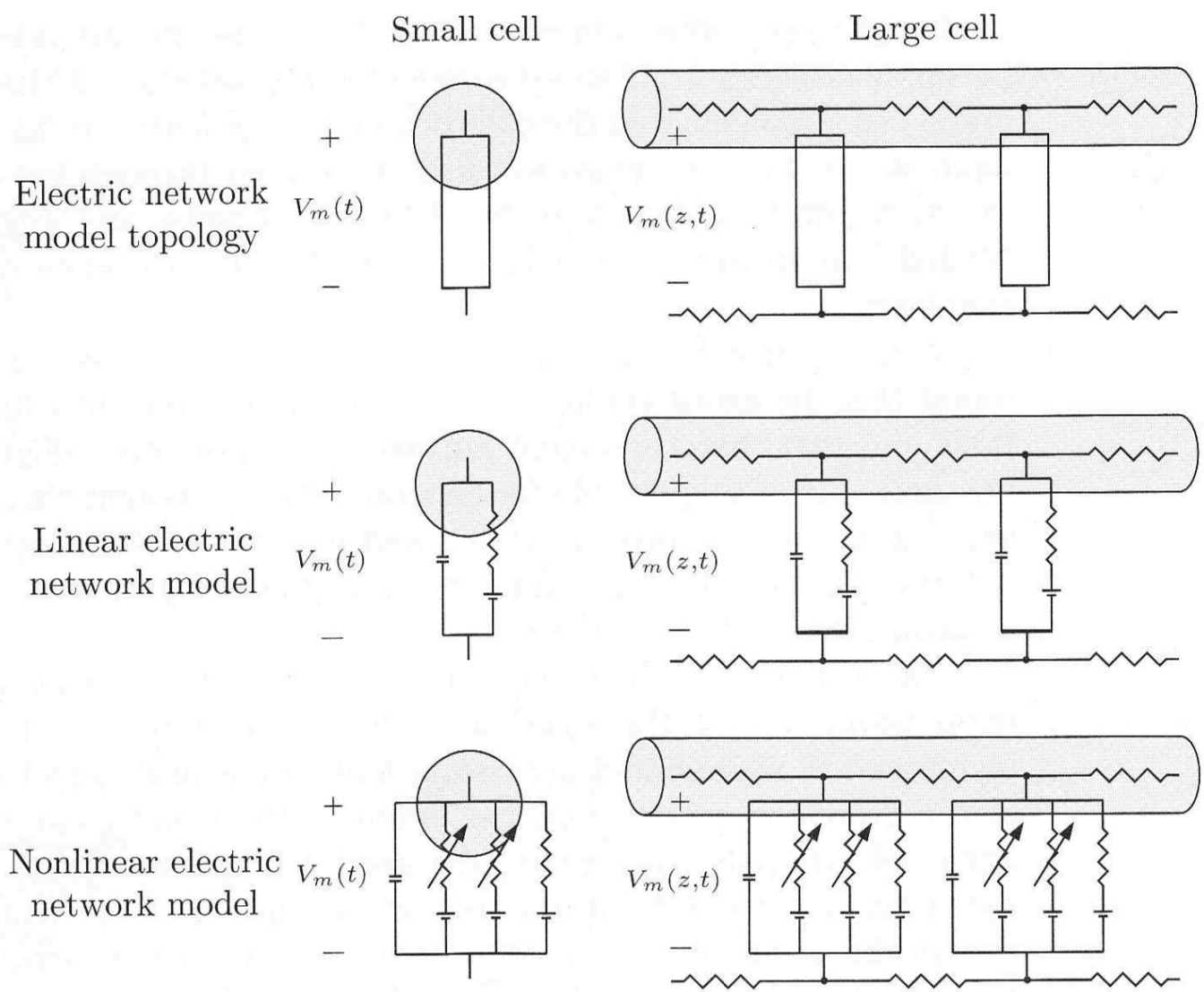

Figure 1.32

→ Electrically ‘small’ cell can still fire action potentials

Voltage-Clamp

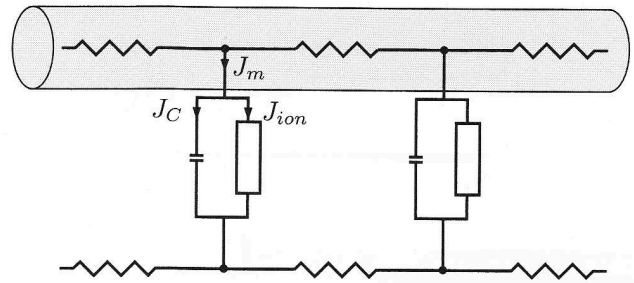

Space clamp

$$\frac{\partial V_m}{\partial z} = 0$$

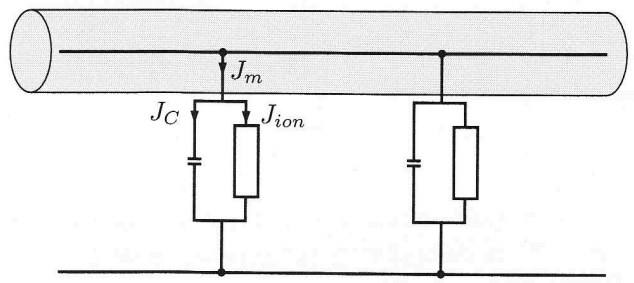

Step voltage clamp

$$\frac{\partial V_m}{\partial z} = \frac{\partial V_m}{\partial t} = 0$$

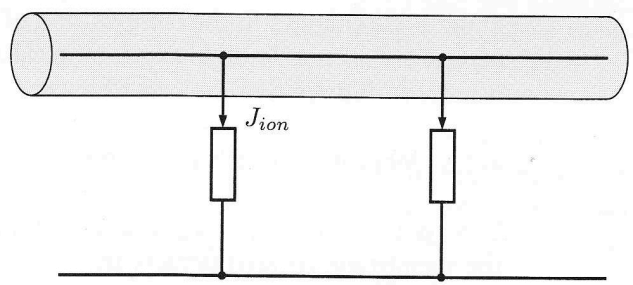

Separation of ionic currents

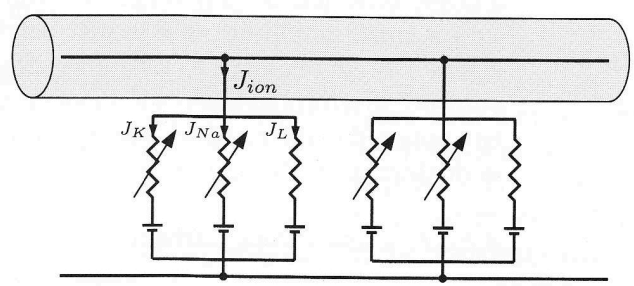

Separating Ionic Currents

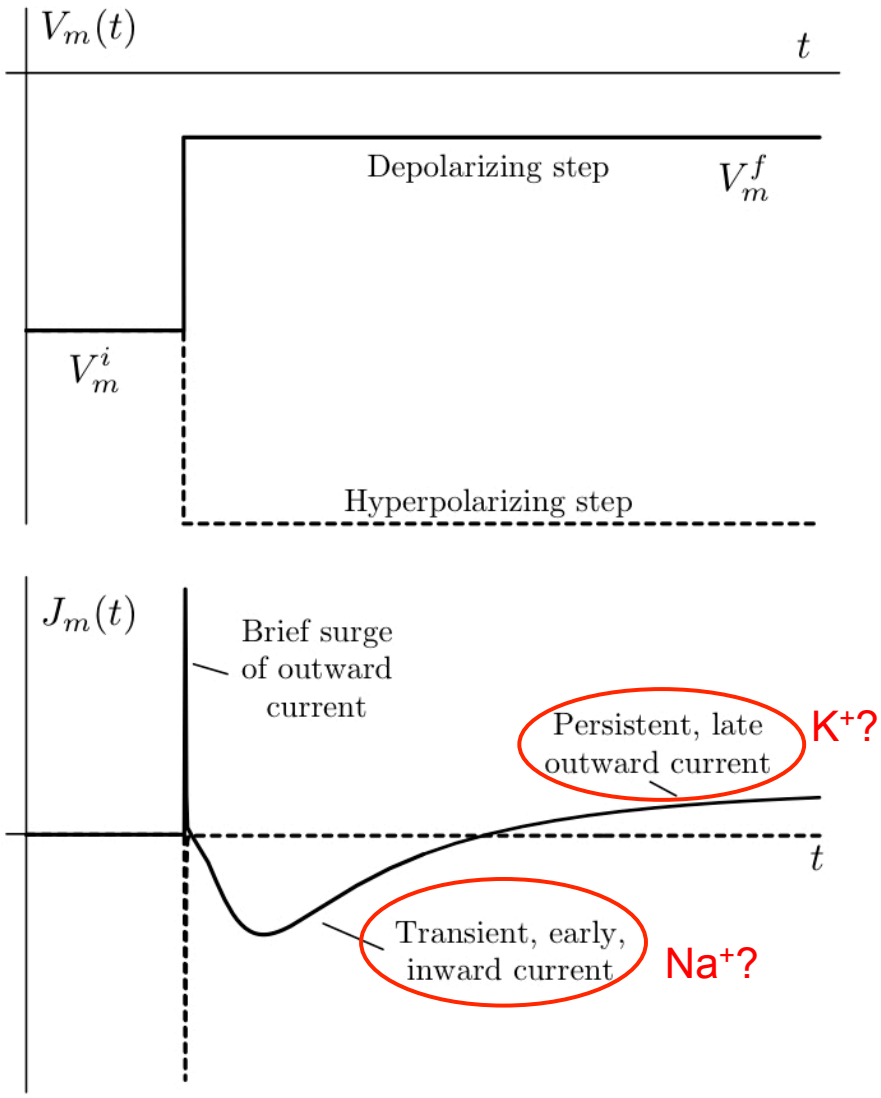

Figure 4.12

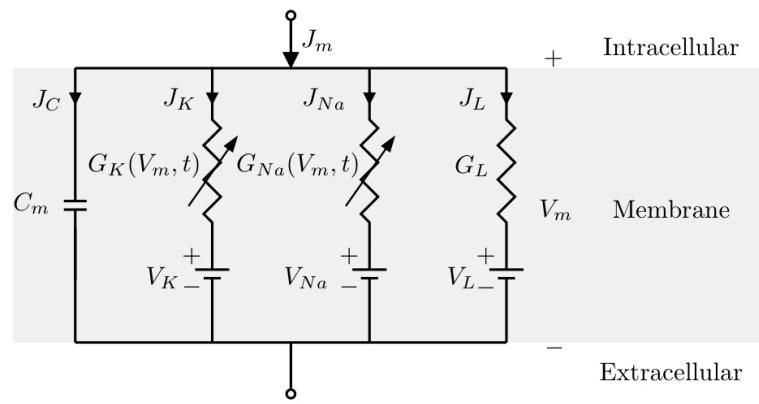

Figure 4.6