FINAL DRAFT

1. Introduction:

   a. Throughout the four year Geomatics Engineering program at York University students learn a variety of subjects including geodetic field surveys, global positioning systems (GPS), analysis of over determined systems, geographical information systems (GIS) and local treatment of Earth's gravity field. Each of these subjects is explored through lab exercises that provide the practical component to the lectures. In some cases the lab exercises draw upon material from multiple courses but they usually focus upon a single subject. The ENG 4000 design project is an opportunity to incorporate the material of several courses into a large scope project.

   b. A constructive element of the summer field survey courses at the Algonquin Radio Observatory (ARO) is that each year students build upon existing work and utilize existing control points. Compare this to a lab exercise on campus where students establish a new set of control points each year without any existing control to tie into. It is unrealistic to perform labs in an isolated manner when tying into existing control is such a critical step of a survey. Establishing a local control network for York University will improve the lab exercises and promote research. The ENG 4000 design project is an opportunity to improve the quality of the Geomatics Engineering program.

   c. Prior to any survey work all equipment must be properly calibrated to ensure that accurate data will be collected. The current lab environment, 020 Petrie Science and Engineering (PSE) building, is not well suited to inspecting all aspects of the instrument that require calibration. The ENG 4000 design project is an opportunity to improve the equipment calibration facilities on campus.

   d. Differential GPS positioning is a positioning method where multiple GPS receivers are set up in an area and one of the receivers remains stationary as a base station. The positions of the receivers can be precisely determined relative to the base station due most sources of error being canceled. An Active Control Point (ACP) is a continually operating base station that has a very accurate and precise position and a key component of the Canadian Spatial Reference System (CSRS). An ACP can be used to strengthen GPS networks in the local area and would be of great use to both the University and the local surveying community. The ENG 4000 design project is an opportunity to prepare the framework for future emplacement of an ACP.

   e. Currently the Geomatics Engineering program at York University is not well known. Many students are unaware that York University offers an engineering program. The department would like to remedy this by creating a monument with the support of the Faculty of Arts to draw attention to the program. The ENG 4000 design project is an opportunity to prepare for future emplacement of a Geomatics Engineering department monument.

   f. The purpose of this project is to establish a control network for the York University campus to be used by the Geomatics Engineering department. This will involve locating existing control points, the construction of stable new control points, performing survey observations to determine positions and recording the information to make it available for the department's use. The project is sponsored by faculty members Dr. Spiros Pagiatakis and Dr. Jian-Guo Wang.

2. Background:

   a. Surveying is a professional occupation that is closely regulated and has well defined standards to ensure quality control. Accordingly, a set of recommendations or requirements exist for most typical survey operations. Much of the work in this project is ensuring that these standards are met and applied correctly. The primary references for this project shall be Ontario, Canadian and U. S. government publications with preference to the most local. Additional references shall be equipment operation manuals and texts covering specific problems.

   b. A list of literature available is included in the references including:

(1) Government publications;

(2) Equipment operators manuals; and

(3) Other reference texts.

c. A list of websites is included in the references including:

(1) Government websites;

(2) Equipment manufacturer websites; and

(3) Software publisher websites.

d. Monuments: A critical step of any surveying operation is connecting the work to existing control. This is done to check the work and to see how it fits into the overall picture of the area. Control is in the form of permanent points with known coordinates called a monuments. These must be stable so that the position of the monument does not change over time. A number of standard monuments are listed in the references and area summarized here:

(1) *Specifications and Recommendations for Control Surveys and Survey Markers* describes twelve types of monuments and includes recommendations as to when each should be used. The general types described are tablet, bolt, post, concrete pillar, pipe, post and deep monuments.

(2) *Ontario Specification for GPS Control Surveys* describes two types of monuments; tablet and post types.

(3) *Guidelines and Specifications for GPS Surveys* describes five types of monuments. The types are tablet, bolt, deep, 3D, helix and post. It also states that the standard concrete monuments are no longer considered necessary except for specific projects.

(4) *Survey Markers and Monumentation* describes seven types of monuments and includes recommendations as to when each should be used. The general types described are tablet, deep and shallow.

(5) Figures 1 through 4 depict examples of the monument types.

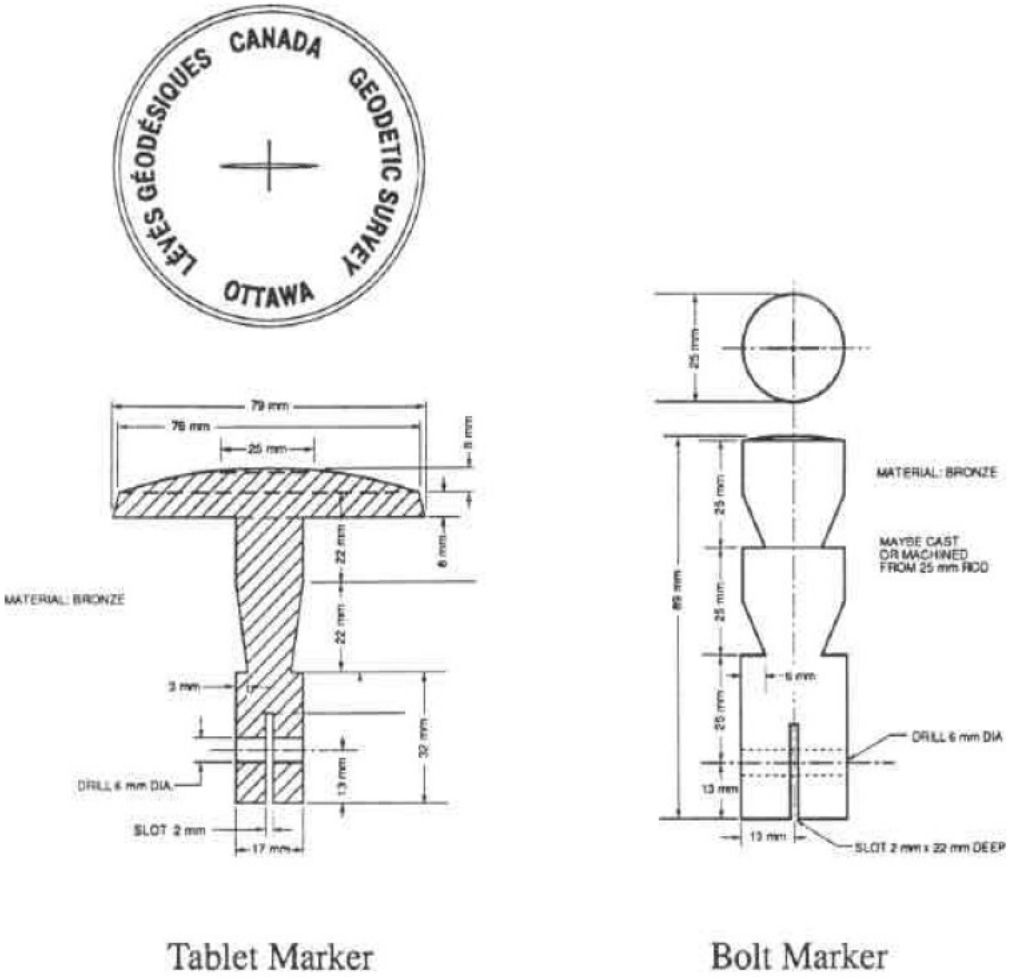

Fig 1: Example Tablet and Bolt Markers,
Guidelines and Specifications for GPS Surveys

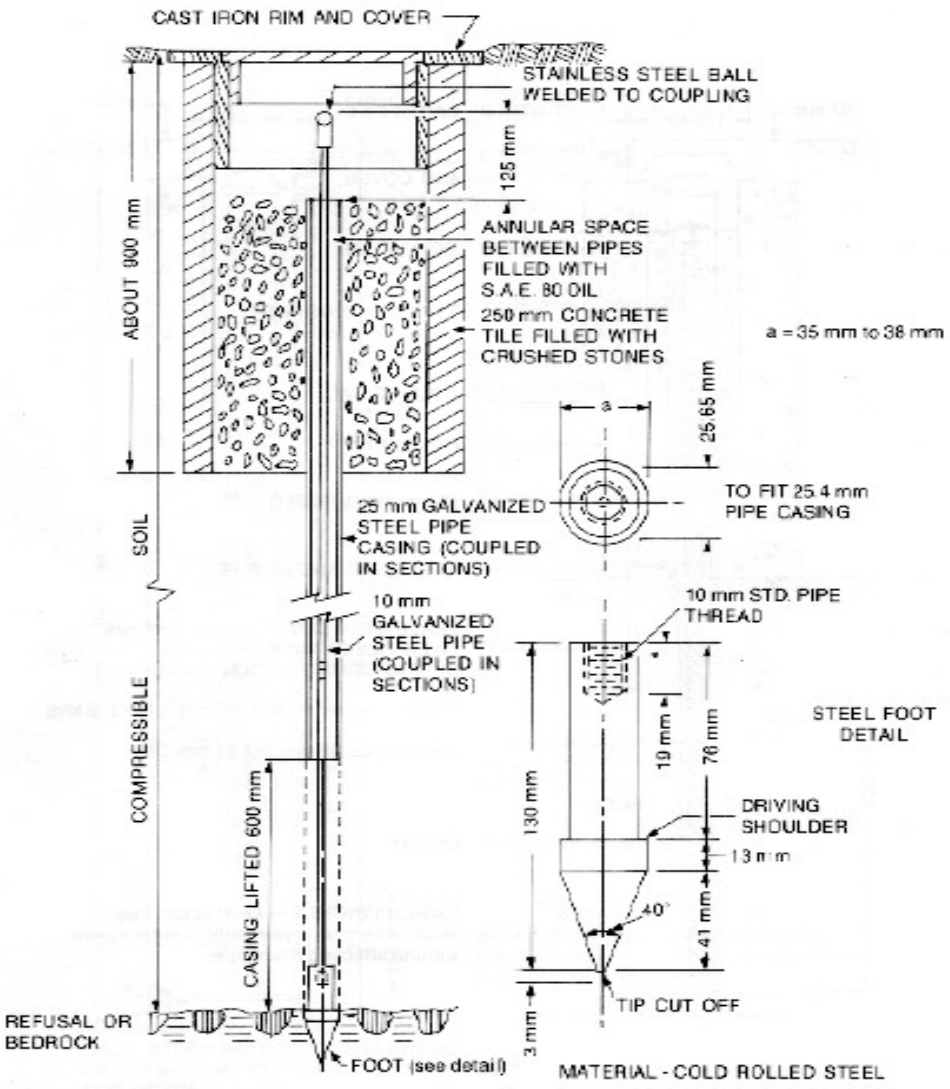

Fig 2: Example Deep Benchmark,
Specifications and Recommendations for Control Surveys and Survey Markers

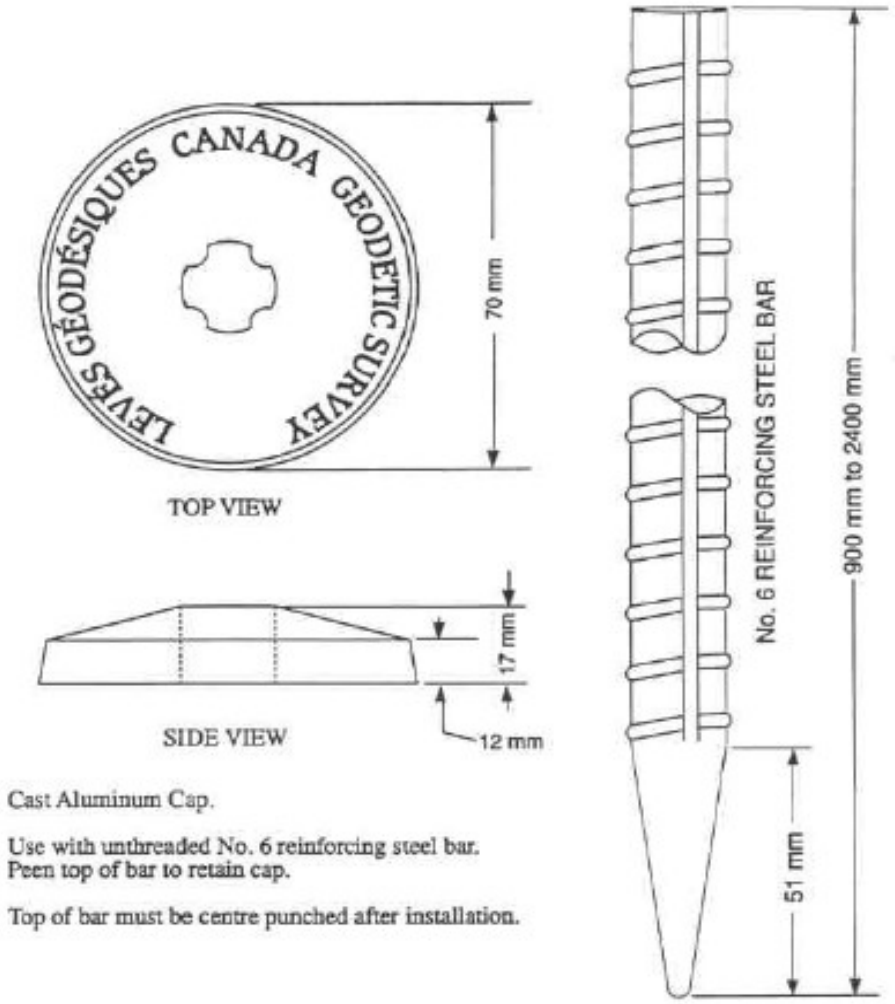

Fig 3: Example Post Marker,
Guidelines and Specifications for GPS Surveys

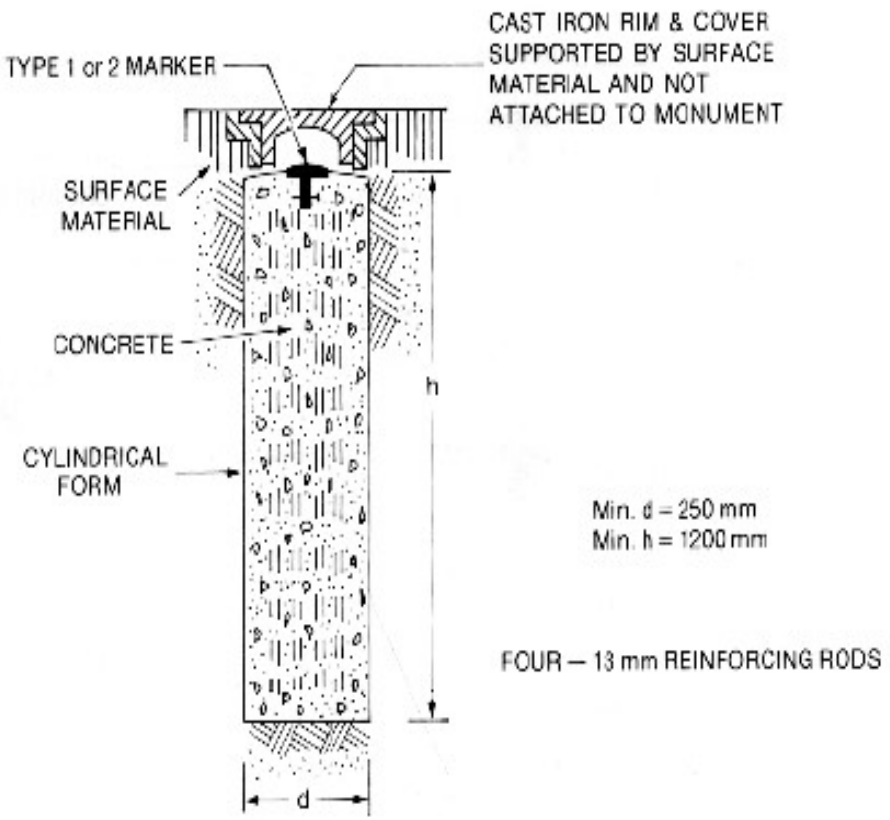

Fig 4: Example Concrete Pillar Monument,
Specifications and Recommendations for Control Surveys and Survey Markers

e. Frost Heave: Frost heave is a natural phenomena that occurs due to water trapped underground

when soil freezes. It results in a upward vertical shift of the ground surface in the winter and a downward vertical shift in the ground surface in the spring. The results are often observed as cracked roads or concrete surfaces. Frost heave will have an effect of shifting the vertical position of improperly designed or constructed monuments meaning the reliability of the points will be poor. Any monument installed will have to be protected from the effects of frost heave. Frost heave can be prevented by anchoring the structure below the frost line. [*Military Soils Engineering*]

f. COSINE Online Database: "The COSINE (Control Survey Information Exchange) database holds horizontal and vertical geodetic control survey data for the province of Ontario" [*COSINE*]. This information is available online and requires an account to use. It will be used during this project to identify and locate existing control in the York University area. Figure 5 shows the COSINE homepage. Though it reports that COSINE was last updated in 2006 there are errors in the information. Figure 6 shows a sample COSINE map for York University. During preliminary reconnaissance along Steeles Ave. W. many of the monuments could not be found. A previous ENG 4000 design project, Subsurface Utility Mapping Systems, also could not locate the control along Steeles Ave. W. and considered them to be destroyed. Toronto Millennium 2000 – 2001 monuments were located during the reconnaissance but information for the points is not included in the COSINE database. The COSINE database is a useful resource but additional information is required to locate and use all existing control.

Fig 5: COSINE Homepage

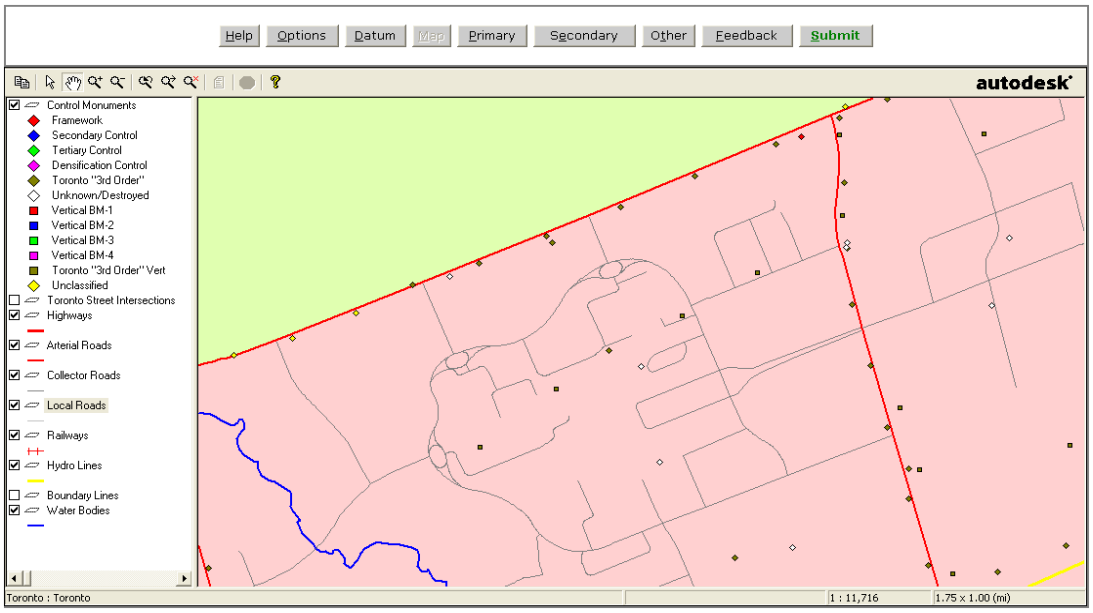

Fig 6: Sample COSINE Map for York University

g. Survey Specifications: The different orders of survey specifications are described in *Specifications and Recommendations for Control Surveys and Survey Markers* and summarized here.

(1) Vertical Control: "The different orders of vertical control are defined in terms of the allowable discrepancy between independent forward and backward levellings between bench marks" [*Specifications and Recommendations for Control Surveys and Survey Markers*]. These values are listed in Table 1 where K is the distance between stations in kilometres.

Order	**Allowable Error**
Special	$\pm 3\text{mm}\sqrt{K}$
1st	$\pm 4\text{mm}\sqrt{K}$
2nd	$\pm 8\text{mm}\sqrt{K}$
3rd	$\pm 24\text{mm}\sqrt{K}$
4th	$\pm 120\text{mm}\sqrt{K}$

Table 1: Allowable Error for Vertical Control by Survey Order,
Specifications and Recommendations for Control Surveys and Survey Markers

(2) Horizontal Control: "A survey station of a network is classified according to whether the semi-major axis of the 95 percent confidence region, with respect to other stations of the network, is less than or equal to: r = C (d+0.2), where r is in centimetres, d is distance in kilometres to any station and C is a factor assigned according to the order of survey" [*Specifications and Recommendations for Control Surveys and Survey Markers*].

Order	C
1st	2
2nd	5
3rd	12
4th	30

Table 2: Values of C for Horizontal Control by Survey Order,
Specifications and Recommendations for Control Surveys and Survey Markers

3. Objectives and Deliverables:

   a. Primary Objective: Establish a control network for the York University campus including gravity field observations. The primary control points must be accurate to first order specifications.

   b. Secondary Objectives:

      (1) Improve equipment calibration facilities on campus;

      (2) Develop labs for future students and establish local control to facilitate them;

      (3) Propose a location for an Active Control Point (ACP) and establish local control to facilitate implementation; and

      (4) Propose a location for an "artistic" Geomatics Engineering department monument and establish local control to facilitate implementation.

   c. Deliverables:

      (1) Publication for the Geomatics Engineering Department and Map Library that documents all control points on campus.

      (2) GIS electronic database to complement the control point publication;

      (3) Field procedures manual for the Geomatics Engineering Department;

4. Group Members and Responsibilities:

   a. Gord Jackson:

      (1) Project Manager;

      (2) Subject Matter Expert (SME) Network Design;

      (3) SME Network Adjustment;

      (4) SME Monument Construction ;

      (5) SME Standards;

      (6) Contact for 2nd Field Engineer Regiment (2 FER);

      (7) Contact for Government Organizations; and

(8) Contact for York University Engineering Department.

b. Mike McKechnie:

(1) SME Survey Level;

(2) SME Total Station;

(3) SME Equipment Calibration; and

(4) Contact for Local Surveyors.

c. Rachana Ravi:

(1) Web master;

(2) SME GIS;

(3) SME GPS; and

(4) Contact for Campus Services.

d. Dr. Spiros Pagiatakis. Faculty Advisor.

e. Dr. Jian-Guo Wang. Faculty Advisor.

5. Work Plan and Time Line:

a. This project shall be completed in six phases with additional tasks as required to meet course requirements:

(1) Phase 1 – Emplace Monuments;

(2) Phase 2 – Establish Control;

(3) Phase 3 – Expand Network;

(4) Phase 4 – GIS;

(5) Phase 5 – Gravity Network;

(6) Phase 6 – Final Project Documentation;

(7) Secondary Objectives (no time allocated); and

(8) Additional Tasks.

b. Phase 1 – Emplace Monuments:

(1) Review existing control points documentation

(2) Conduct reconnaissance of existing control points;

(3) Select locations for new control points;

(4) Select and design control point monuments IAW standards;

(5) Gain permission for construction;

(6) Acquire equipment and materials; and

(7) Construct monuments.

c. Phase 2 – Establish Control:

(1) Select equipment and calibrate;

(2) Establish field operation procedures;

(3) Conduct validation survey;

(4) Network design and pre-analysis;

(5) Perform GPS and leveling observations;

(6) Process observations; and

(7) Strengthen network as required to meet first order standards.

d. Phase 3 – Expand Network:

(1) Select equipment and calibrate;

(2) Establish field operation procedures;

(3) Connect network to existing control points; and

(4) Process observations.

e. Phase 4 – GIS:

(1) Select GIS framework;

(2) Obtain existing GIS data; and

(3) Add new GIS data for network.

f. Phase 5 – Gravity Network:

(1) Select equipment and calibrate;

(2) Establish field operation procedures;

(3) Perform gravity observations for primary control points;

(4) Process observations;

(5) Update GIS database; and

(6) Further details once ENG 4120 has begun.

g. Phase 6 – Final Documentation:

(1) Finalize control point publication;

(2) Finalize field procedures manual;

(3) Finalize GIS database;

(4) Ensure project objectives are complete;

(5) Prepare final report; and

(6) Prepare presentation.

h. Secondary Objectives (no time allocated).

i. Additional Tasks:

(1) Complete interim report;

(2) Maintain website; and

(3) Maintain correspondence with faculty advisors.

j. A project time line is included in appendix B. No project activities are scheduled during the Fall and Winter exam periods. Reading week is a period where any outstanding field work can be performed. Currently no time is allocated towards the secondary objectives. If the project is ahead of schedule at the end of the fall term the time line will be revised to allocate time for the secondary objectives.

6. Milestones:

Milestone	Date Complete
Phase 1 – Emplace Monuments	28 Oct 06
Phase 2 – Establish Control	02 Dec 06
Phase 3 – Expand Network	17 Feb 06
Phase 4 – GIS	24 Feb 06
Phase 5 – Gravity Network	24 Feb 06
Phase 6 – Final Project Documentation	30 Mar 06

7. Resources:

a. Budget: There is an initial budget of $1000.

b. Work Space:

(1) Engineering Lab, 020 PSE: Available to all group members. Holds most of the required software and survey equipment. A common area that will be used for most meetings.

(2) Undergraduate Machine Shop, 007 PSE: Is available for use with booking through the course director. Holds machine tools suitable for metal and wood working.

c. Equipment:

(1) Survey Equipment. The survey equipment is limited to what is held by the engineering lab and will be sufficient for the project work. The relevant equipment includes:

(a) 1 x Zeiss NI 002 precise level;

(b) 2 x Leica GPS 1200 GPS receivers:

a. Antenna SN 03470094 and System SN 450630; and

b. Antenna SN 03470010 and System SN 450509

(c) 2 x Leica TC 1800 total stations:

a. 33YU01 SN 425341; and

b. 33YU02 SN 425309

(d) 1 x Leica TCR 705 total station: 31YU01 SN 652484

(e) 1 x Nikon NPL-350 total station: 32YU01 SN 050637

(f) 2 x Sokkia SET 510 total stations:

a. 30YU01 SN 21978; and

b. 30YU02 SN 21925

(g) 2 x 3m Invar Rods;

(h) 3 x Psychron Thermometers:

a. 95YU01;

b. 95YU02; and

c. 95U03

(i) Assorted Tripods;

(j) Assorted Prisms;

(k) Assorted Tapes; and

(l) Barometers are available through the EATS department

(2) Construction Equipment. The Geomatics Engineering department holds no construction equipment. Some construction equipment is privately owned by the group members. 2 FER will be able to provide a wide range construction equipment subject to unit training requirements. This will be sufficient for the project work.

(3) Personal Equipment. Additional equipment to assist the project is privately owned by the

group members and will be used as required. Examples include digital cameras and personal GPS receivers.

d. Computer Software: Much of the survey software to be used requires a license and is installed on the engineering lab computers. Some work will be restricted to engineering lab computers. Notable software includes:

(1) Autodesk Map Guide Viewer v6.5 (free download);

(2) Best-Fit Computing Columbus v3.6.2.25 (free demo works up to network of fifteen stations);

(3) ESRI ArcGIS v9.1(installed on lab computers);

(4) Google Earth beta 4 (free download);

(5) Leica Geo Office v2.0 (installed on lab computers);

(6) Microsearch GeoLab v2001.9.20.0 (installed on lab computers);

(7) Trimble Planning Software v2.7 (free download)

e. Personnel: The group has three members which is sufficient for typical survey operations.

f. Time: The project must be completed within the Fall and Winter terms. Ability to work will be limited by season. The requirements of the design project must be balanced with other courses.

8. Costs:

a. The primary costs of this project will be the materials required to construct the monuments. These costs will depend on the number of monuments required and the type selected. It is estimated that three monuments will be required for the primary control stations. A fund of $825 shall be allocated for the monument materials. Sample costs for a monument are listed in the table below.

Monument Material	Cost
Tablet	?
Cap	?
Post	?
Gravel (per kg)	?
Concrete (per m^3)	?
60 mm d Galvanized Steel Pipe (per m length)	?

Table 3: Sample Monument Material Costs

b. Additional cost associated with the monuments is the cost of construction equipment. 2 FER will be able to loan the required construction equipment. No funds shall be reserved for equipment rental.

c. The survey equipment held by the engineering lab will be sufficient for the field work required. Any equipment found not serviceable and requiring repair will draw upon department funds. No funds shall be reserved for survey equipment rental or repair.

d. One of the course requirements is that a project website must be maintained. Each York University student is entitled to a web service that enables creating and publishing personal web pages. One

group member will be responsible to maintain a web page using these resources. No funds shall be reserved for web page design or hosting.

e. During the final presentation and demonstration each group is expected to have prepared a poster. Printing rates for the campus print shop are included in appendix C. The poster will be designed by the group members therefore no design costs will be incurred. A fund of $100 shall be reserved for the printing of a project poster.

f. The final deliverables include publications to be submitted to the York University Map Library and Geomatics Engineering department. A fund of $75 shall be reserved for the printing of reports and final publications.

g. The estimated project costs are summarized in the following table.

Component	Expense
Monument Materials	$825.00
Construction Equipment	$0.00
Survey Equipment	$0.00
Website	$0.00
Poster Printing	$100.00
Publication Printing	$75.00
Total	**$1,000.00**

Table 4: Project Costs