June 1999

Methods of Task Analysis in Cognitive Development

Juan Pascual-Leone and Janice Johnson

York University

ABSTRACT

We formulate a general method of developmental task analysis with three initial restrictions: It is relative to (1) a stipulated situation and task, and (2) a chosen task-solution strategy; and (3) it presupposes a more or less explicit dynamic model of the "psychological" organism, with cognitive resources that the subject uses to construct the task and the implemented strategy. In achieving a complete task analysis, we recognize three complementary methods (or "moments") that are cumulative --- the last one yielding organismic-process models. We introduce a novel working-memory paradigm, the mental attention memory (MAM) task, constituted by three subtasks: MAM-Simple (an easy, facilitating, working memory task), MAM-Telephone (a somewhat misleading task that measures mental attention), and MAM-Stroop (a difficult misleading task that highlights inhibitory processes that can restrict working memory to a child's age-dependent measure of mental attention). Detailed process models of these subtasks illustrate methods and their complementarity. We summarize supporting data and suggest quantitative structural ways to assess these models, without using empirical parameter estimations.

INTRODUCTION

Developmental psychology in the new millenium needs to evaluate, and represent by means of process models, the mental processes that bring about understanding and executive management of tasks. This is needed to facilitate experimenters' construals of task solutions, of individual-difference factors that facilitate or hinder task performance, and to make easier the semantic, or information-processing, interpretation of neuropsychological data. Methods of task analysis are, therefore, important in the research enterprise. The present paper illustrates a method of cognitive task analysis and its utility in predicting and explaining developmental data.

Task analysis is a collection of heuristic rational methods that the analyst can use to derive -- from a description of a task and an explicit/implicit general model of the subject (i.e.. his or her type) -- a specific operative model of processes that in the subject's organism might generate the intended task performance. Although it is not often recognized, the implicit epistemological foundations of these methods are constructivist and intuitive in a rationalist way (as is analysis in mathematics and classic geometry; see Hintikka & Remes, 1974). If explicitly done, this analysis deals with graphic and/or symbolic representations of simple or complex "objects," the relations among them, and procedures for changing them. In postdictive task analysis, there is a known behaviour or performance to be explained process-analytically. The analyst aims to derive this performance from (1) the structure of the task to be analyzed, and (2) an implicit or explicit general model of the subject's psychological organism -- what elsewhere we have called a metasubject (the organization of the "software" and "hardware" processes that in the subject's psychological organism produce the performance; Pascual-Leone & Goodman, 1979). Postdictive task analysis is a rational reconstruction of the metasubjective processes (i.e., processes in the psychological organism) that within a given task can generate the performance. The method of analysis that yields this rational reconstruction is a dynamic hybrid mixture of deductions and inductions -- abduction processes in

the sense of Peirce – and the rational reconstruction is from an **organismic model** and a **task within a situation** to a **known performance.**

A rather different case is that of predictive task analysis. Whereas in postdictive task analysis the subject's performance in the task is already known when the analysis begins, in predictive task analysis this performance is (epistemologically speaking) not known. The rational reconstruction in this predictive case is from an **organismic model** and a **situation** to a **task, so as to generate the predicted performance.**

This inferential hermeneutics or rational reconstruction can be very different, depending on the epistemological aims of the analyst. From this perspective, we distinguish three different kinds of task analysis. which are nested, in the sense that completion of the latter ones presupposes completion of the former ones. These three kinds of analysis are objective, subjective, and metasubjective (i.e., organismic-process) analysis (Pascual-Leone & Johnson, 1991). In objective analysis, which psychology shares with all sciences, one describes the objective objects, procedures, and relations that are known about the situation, task, subject, and performance. One does not, however, describe natural organismic units (i.e., psychological units) of processing nor refer to the "hardware" processes that in the organism produce the performance. In objective analysis, the organismic model formulation is insufficient to account for the performance. An advanced form of objective analysis is what Halford (1993; Halford, Wilson, & Phillips, 1998) and others (e.g., Robin & Holyoak, 1995) call the analysis of "relational complexity;" that is, analysis of coordinated essential aspects or dimensions of variation that a subject must have considered in his or her mind to be able to produce the intended performance. This form of relational-complexity analysis is based on an inference about the sort of information a subject needs to solve the task; in this sense it goes beyond objective analysis, into the subjective kind.

Subjective analysis adds, to the objective analysis, the modeling of processes in terms of

explicit organismic units (such as schemes/schemas); but it is still limited, because processes are modeled only holistically as task totalities (Piaget's logical models of tasks are an example). Consequently, real-time unfolding, that is, the natural sequencing of task processes, is omitted from the rational reconstruction, as are relevant "hardware" mechanisms of the subject's organism that should intervene in generating performance. Methods of task analysis such as those used by Case and his students (Case, 1992, 1998; Case, Okamoto, Henderson. & McKeough, 1993) go beyond subjective analysis in that they occasionally include real-time reconstruction of some task-solving processes, and also some organismic hardware constraints such as those of working memory. These methods do not yield a true metasubjective (i.e., organismic-process) analysis, however, because they do not represent systematically real-time unfolding and all the organismic hardware constraints.

Metasubjective analysis adds to subjective analysis the systematic modeling in "real time" of sequences of natural steps; and it represents, in its rational reconstructions, both the organismic units and all hardware processes that are thought to intervene in the production of performance.

We illustrate these methods in the context of a task designed to measure mental-attentional capacity, the mental attention memory (MAM) task. This task is constituted by three subtasks, each eliciting a greater amount of misleading organismic factors, so that the contrasted comparison of the three rational-reconstruction models can highlight the importance for task analysis of the general organismic model . At the same time, we concretely show the need to differentiate theoretically between working memory and the M-space created by the application of mental-attentional capacity.

IRE ORGANISMIC MODEL: A MINIMALIST SUMMARY

To produce task analyses that can go beyond common sense, one needs an explicit formulation of the psychological organism of the subject. To illustrate the power of this sort of task analysis we shall assume a particular organismic model, even though task analysis is not restricted to this model and could be conducted with a different one. The model that we entertain (e.g., Pascual-Leone,

1987) is constituted by three categories of constructs: a diverse repertoire of organismic units, the schemes (or schemas) that carry the psychological information: a set of hardware operators or neuropsychological mechanisms that intervene in the processing of schemes elicited by (or relevant to) the task; and a set of organismic principles that regulate the interactions between schemes and hardware operators. For lack of space we do not define schemes, relying instead on the reader's general knowledge (see, e.g., Pascual-Leone & Johnson, 1991). We only add that schemes are dynamic functional systems (collections of neurons that are co-functional and often co-activated), which compete with each other for application and function as self-propelling semantic-pragmatic conditionals (i.e_, given activated Conditions, activated Effects emerge that may apply if they win the competition with other incompatible schemes).

The hardware operators are basic hardware functions such as mental attentional activation and inhibition, content learning, automatization, structural/conceptual learning, neoGestaltist "field" factors of simplicity, etc. Hardware operators can modify the current state of schemes, either by changing their form or creating new schemes (this is what the learning operators do) or by dynamically changing the state of activation (assimilatory strength or propensity to apply) of the schemes, as the mental-attentional operators tend to do. We illustrate only the latter effect, along with the mental attentional mechanism. The only organismic principle we discuss is the principle of Schemes' Overdetermination of Performance or SOP principle. This principle, congenial to the spreading-of-activation and summation principles of modern connectionism can be stated as follows: Because all activated schemes tend to apply simultaneously to inform (in the etymological sense of "injecting" form into) the performance, the performance--at any time--is synthesized by the dominant (most activated) cluster of compatible schemes available in the brain at the time of responding. The probability of this performance is then relative to the dominance of the cluster of schemes generating it; and the dominant cluster that determines the next portion of performance is the one in which the

summed activation propensities of its members is highest (Pascual-Leone, 1989, 1995; Pascual-Leone & Baillargeon, 1994; Pascual-Leone & Goodman, 1979; Pascual-Leone & Johnson, 1991; Pascual-Leone & Mona, 1991).

In our dialectical constructivist theory, mental attention is a hardware mechanism -- an organismic dynamic system of brain resources -- whose capacity increases developmentally with age in normal persons, from the point of birth till adolescence. The stipulated level of this mental capacity is a quantitative characteristic of Piaget's developmental stages, as we and others have shown in our research (e.g., Case, 1992, 1998; Johnson, Fabian & Pascual-Leone, 1989; Pascual-Leone, 1970, 1980; Pascual-Leone & Goodman, 1979 Pascual-Leone & Baillargeon, 1994). Table 1 specifies the idealized levels of mental attentional capacity. which are assessed in terms of the number of task-relevant schemes that the child can simultaneously keep hyperactivated ("in mind") by means of his or her mental attention.

Mental attention can be explicated intuitively in terms of the interaction among four hardware operators (brain resources):

(1) A mental attentional "energy" M, functionally related to the brain's prefrontal lobe, that can be used to hyperactivate (i.e., boost the activation of) schemes that are relevant for the task at hand;

(2) A central attentional interrupt I or active-inhibition operator, also related to the function of the prefrontal lobe, that can be used willfully to suppress schemes that are activated by the situation, but are misleading or not relevant for the task at hand;

(3) A set E of mental-attentional executive schemes that together can monitor the mobilization and allocation onto schemes of M and I, to hyperactivate or inhibit them as needed;

(4) And, finally, the Gestaltist "Field"-factor principle, or F operator (often known as "minimum/simplicity principle" or "S-R compatibility"; Proctor & Reeve, 1990) that helps to organize the field of mental attention (its content, the schemes attended to) bringing it to a simple

dynamic performance closure--whether perception, representation, external action, or mentation (Pascual-Leone & Mona, 1991).

As a result of non-linear dynamic interaction among these four mechanisms and the schemes available in the subject's repertoire, a heuristic implicit "choice" and synthesis of performance (whether in action, perception, representation, or mentation) takes place, which is brought about by the F and SOP mechanisms. It is within such a non-linear dynamics for constructing actual performance that the significance of mental attention, as a major developmental mechanism, becomes fully clear. From this perspective, mental attention appears as the organismic functional system (or modular "function" < ...>) constituted by three resource capacities and a special subrepertoire of schemes -- the attentional executive schemes -- in their interaction as attentional operators <E,M,I,F> (Pascual-Leone, 1987; Pascual-Leone & Baillargeon, 1994). Mindfulness results from the skilful use of these attentional operators to ensure that as many task-relevant schemes as possible are hyperactivated and applied to the situation, while task-irrelevant schemes are inhibited. When some of the schemes activated by the situation are mutually incompatible (so that they cannot all apply together), the one that is most highly activated (or the dominant cluster of compatible schemes) will tend to apply, preventing the others from doing so--unless this dominant scheme is mindfully (i.e., actively, willfully) inhibited with the help of mental attention (mental interruption) discussed below. In misleading (or distracting) situations mutually incompatible schemes are activated, and the initially stronger schemes are unsuitable for the task at hand. Thus in misleading situations mental attention must be used to generate an adaptive, mindful performance.

Figure 1 illustrates this model of mental attention. The hardware operators E, M, and I, all mechanisms related to the prefrontal lobe, are represented in the Figure as a "flashlight" of mental attention that directs its beam to the repertoire of substantive ("action") schemes located in other cortical regions. The inner ellipse of its mental-attentional "light" we call the M-space; it represents

the processes that are effortfully kept in mind -- the set of schemes to which mental-attentional energy (i.e., M capacity) is allocated. We call M-process the processing of hyperactivated schemes that form part of the M-space. As William James and Husserl pointed out, this beam of attention is phenomenologically real, and one can by introspection notice its "edge" -- the phenomenal boundary beyond which we can no longer clearly notice. This "edge" of the "beam" results from the interruption caused by the I-operator: Schemes that are not being attended to in a given act of mental attention (i.e., not part of M-space) tend to be automatically--effortlessly--interrupted (this is the automatic, as distinct from the effortful, function of the I-operator).

In misleading situations, the I-operator is often willfully (effortfully) mobilized and allocated to schemes that are clearly irrelevant (misleading or distracting) for the task at hand. This has the effect of wiping out that part of working memory (i.e., the total current set of hyperactivated schemes in the subject's repertoire) which is not the M-space (M-space is of course a component of working memory); this point is important for the task analyses that we present later. In Figure I the innermost ellipse represents the M-space, and the next ellipse represents working memory. The outer ellipse represents the set of all activated schemes in the repertoire (whether hyperactivated—working memory--or not). In misleading situations, the M-operator might be mobilized and allocated to relevant schemes only after the application of the I-operator; such a strategy could be useful if the misleading schemes can be identified in advance--an instance of selective attention. In our model, mental effort is the willful mobilization and allocation, to schemes activated in the situation, of the M and/or I mental-attentional resources.

There are other cases, however, in which the use of I-interruption is not desirable. Facilitating situations are a case in point. A situation is facilitating when no misleading or distracting schemes actually co-exist activated in the situation. In this case it is often better to avoid narrow focussing of mental attention ("focal attention") and instead adopt a very broad attentional allocation

policy. In this manner, schemes hyperactivated in working memory outside the M-space can be preserved and used in the task; even activated schemes outside working memory (inside the outer ellipse in Figure 1) might be utilized for the performance, boosted by the sensorimotor (not the mental) attentional capacity as suggested below (Pascual-Leone & Johnson. 1991, 1999).

Notice that in many situations there are hyperactivated schemes not being activated by mental attention (i.e., schemes inside working memory, but not part of M-space). Hardware operators, other than M-capacity, that can apply to hyperactivate schemes are affective factors (A) and learning factors (C or L), which we do not discuss in the current paper.

We have created a variety of tasks for measuring M capacity. M is measured in terms of the number of schemes the person can internally activate simultaneously to appraise the situation. The power of M capacity increases with age in normal subjects up to adolescence: This structural size-measure of M-capacity is a quantitative developmental characteristic of the stages in cognitive development, as was shown above in Table 1 (Johnson et al., 1989; Pascual-Leone, 1970; Pascual-Leone & Baillargeon, 1994).

OBJECTIVE AND SUBJECTIVE ANALYSIS OF **THE MENTAL-ATTENTION** MEMORY TASK

The mental-attention memory (MAM) task is a modified span task in which consonants are presented in a circular pattern. Subtasks differ in degree of interference with the main recall task. In the Simple task, after reading the consonants aloud (one per second) the participant has to recall them in any order. In the Telephone task, after reading, the participant must both recall each consonant and dial it on a rotary telephone. In the Stroop task, after reading the consonants, the participant must respond to a Stroop card before he or she is allowed to recall each consonant. On the Stroop card, the child is presented with a colour word (e.g., the word GREEN) which has been printed in an incongruent colour (e.g., in red ink). He or she is required to name the colour of the

ink. As is well known, because they have automatized the habit of word reading, participants have the strong tendency to read the word (w) instead of naming the colour of the ink (cw). This strong interference slows the person down and necessitates effortful mental interruption of the reading schemes.

The objective analysis of this task enumerates its essential elements, whether "objects" (figurative schemes), procedures (operative schemes), or more complex adjectivaUadverbial/adjunct information (complex schemes). Figures 2 and 3 present objective analyses in the form of flow charts; notice that even in this objective analysis the analytical method requires the use of theoretical assumptions about how the subject approaches the task (i.e., some theoretical model of the organism). The flow charts place the task elements in temporal order and in interactions that capture the common sense construal of the task as perceived by an observer. The left side of Figure 2, when taken in isolation, models the Simple task; the whole of Figure 2 models the Stroop task. Figure 3 models the Telephone task.

Starting from the objective analysis, one can obtain a subjective analysis by accepting a psychological unit of processing, for instance, the scheme construct. In Table 2, we use elementary operator logic notation to model the subjective processing in the tasks. We represent schemes as operators that apply on argument-objects situated to their right. We symbolize <u>operative</u> schemes (i.e., procedures) with capital-letter words, and <u>figurative</u> schemes (e.g., object-states) with low-case letters or letter-words.

As this Table shows, the Simple task is represented in terms of a single operative READMEM (Read and Memorize), which replaces the two similar operative functions of the flow charts. This is proper because, subjectively, reading and memorizing the consonants in the task occur concurrently, and the subject must have already coordinated logical structures (L-structures) encompassing both. READMEM applies on the consonants ci which, by experimental design in our

tasks, are a total of k+4. The parameter k is the theoretically predicted mental capacity of a child for processing symbols. The age-linked values of k are shown in Table 1; a 9-year-old child (k = 4), for example, would be presented with 8 consonants on each trial.

The assumption is that READMEM (and the other operatives in this task) being a unary (one-argument) operator will apply on each of these consonants one at a time. The model of the Telephone task contains two other operatives, SCANTEL (i.e., "scanning the telephone dial to find in it a particular consonant") and DIAL (i.e., dialing the consonant just found on the phone dial). Each of these operatives applies on the result (output) of the previous operative, as the parentheses indicate. Thus, in terms of the parentheses, the innermost operation is carried out first, and then the next one to the left, etc.--always moving in the formula from the inner to the outer levels defined by the parentheses.

This simple layered structure of parentheses is not found in the Stroop task, because the STROOP operation functions as a condition parameter: Satisfactory completion of the Stroop operation, with the experimenter-provided Stroop card, is a necessary condition for the subject to be allowed to voice the next letter. The symbol # superscripted to the parentheses that enclose the Stroop operation indicates that this a condition parameter. The letters 'cw' annexed to the STROOP operator stand for the ink-colour that the subject must name; the letter 'w' enclosed in brackets with the superscripted -1 sign, i.e., $[w]^{-1}$, symbolizes the misleading factor in the subject that tempts him or her once and again to read aloud the colour word instead of naming the ink.

Comparison of the structural complexity of these three formulas clearly suggests that they are ordered in processing complexity. The subjective method cannot provide, however, a (epistemological) proof that this is so: One remains uncertain. To provide this rational proof and quantify the degree of processing complexity (i.e., the mental--M--demand) of the tasks, one must move into metasubjective analysis.

METASUBJECTIVE ANALYSIS OF **THE** MENTAL-ATTENTION **MEMORY** TASK

In metasubjective (i.e., organismic-process) analysis one must use an organismic model to provide additional constraints that yield a fuller operative model with greater concreteness in its process description. The organismic model we shall use is described by the theory of schemes/schemas and by the model of mental attention that we symbolized in Figure 1. For ease of exposition, we present our metasubjective analyses for the case of a child who has an M-power (Mp) of e+4 (i.e., k = 4; the predicted Mp of a 9-10-year-old). The analyses generalize easily to other Mp levels. The analyses necessarily show an order of recall in the tasks. The order we use is rather arbitrary, however, and is not important for the point we wish to make (but this sort of modelling can be used to investigate, in a working-memory task, the serial order effects as a function of mental-attentional strategies). What is important now is the constraint that the size of the M-space places on the number of consonants that can be recalled. We represent the task analyses using a logical-operator system of notation that reveals a task's structural characteristics as theoretically inferred in the analysis. Table 3 gives a summary explanation of the main syntactic features of the task analyses that follow.

Figure 4 symbolizes the metasubjective analysis of the Simple task. Now the process is broken into natural steps that symbolize distinct successive moments of activation in the subject's repertoire of schemes. In all steps, the outermost braces 1... } symbolize the field of activated schemes in the subject's repertoire (i.e., the space enclosed by the outer ellipse in Figure 1, which we call <u>field of activation).</u> The capital letters in italics symbolize hardware operators: M, the mental-attentional activatory capacity; and E, the set of executive schemes currently running the process. The inner brackets [...] signify the M-space (i.e., the space inside the innermost ellipse in Figure 1). Scheme-symbols placed inside the brackets [...] to the right of M are being boosted by the M-operator into hyperactivation (unless stated otherwise). Task-general executives E are kept in high activation by the mental capacity developed during infancy (the sensorimotor period) and

consequently are not counted within the schemes activated by the mental (i.e., not sensorimotor) attentional capacity (see Pascual-Leone & Johnson, 1991, 1999).

Step (1) shows the READMEM operative applying on perceptual letter-scheme ci, seen in the circular letter display, to produce the cognitive (i.e., encoded) letter-scheme *el. Notice that the letter-scheme ci is enclosed in braces that have subscripted to them the symbol "sit." Braces inside the M-brackets signify that the scheme inside them is not being boosted by the M-operator, but rather by some other process that is indicated by the subscript to the braces, in this example "sit". "Sit" is an informal reference to the perceptual situation, which makes salient the cues for the perceptual letter-scheme, so that boosting with M-capacity is not needed. By experimental design, subjects are presented in the task with k+ 4 letters arranged in a circle, where k is the subject's theoretically-predicted M-power (see Table 1). Each of steps (1) through (k+4) of the M-construction in Figure 4 represents an act of cognitive encoding of a letter and memorizing it, while the READMEM operative-scheme and the previously noticed letter-schemes are kept inside the M-space ("kept in mind") to avoid forgetting. An M-construction is a real-time metasubjective analysis of the task-solution process.

Starting in step k+l the child--who at any one time can boost with M only k schemes--has run out of mental energy (i.e.. "room" in the M-space) and begins to withdraw M-activation from some letter-schemes (thus "expelling" them to the field of activation--to the space inside the outer ellipse in Figure 1). Up to two schemes in the field of activation are bracketed and subscripted with the symbol "Me." This symbol makes reference in our theory to the mental attentional capacity that develops during the sensorimotor period (Pascual-Leone & Johnson, 1991, 1999). Because the MAM-Simple task constitutes a facilitating situation, in the sense defined above, attentional capacity developed for boosting symbolic processes during the sensorimotor period can be utilized here; the subscripted mark Me indicates that the letter-scheme in question is also being boosted in this manner

(and thus no mental attentional capacity is needed). At least one scheme can be boosted by Me; the question mark "?" indicates our current uncertainty as to whether a second letter-scheme can be so boosted (this is an empirical question).

In step k+5, the subject has completed the cognitive encoding of all the letters, and this state of affairs elicits as a consequence (written after the arrow), the executive injunction to begin voicing (saying aloud) the remembered letters (this is the meaning of "voice") . Another important syntactical/notational feature can be observed in step k+5: The letter-scheme $*_{ck.4}$ is placed inside braces (i.e., excluded from M-boosting), because it is assumed to be boosted instead by the memorizing operative MEM. The superscript L_i of MEM means that MEM is an L-structure (i.e., a psycho-Logical complex scheme that coordinates simpler schemes relevant to its action, such as the letter-scheme $^*_{ck+4}$ on which it currently applies). The L_i subscripted to the braces of $^*_{ck+4}$ indicates that this letter scheme currently is instantiated as part of the MEM L-structure and is, therefore, being boosted by it (instead of by M).

Finally, in steps k+6, k+7, and subsequent steps which we have omitted, the child begins to voice (i.e., say aloud), one by one, the letters, thus generating the corresponding overt Responses which we denote RES"($*c_i$), etc. Notice that in step k+7, there is now room to retrieve $*c_k$ from the field of activation and into the M-space. One important theoretical point is not well highlighted in our rational construction: As the person proceeds to produce the overt vocal responses (RES"), the focussing of M-capacity on this motor response operation should release an automatic interruption (I-operator, i.e., central attentional inhibition) which should wipe out the schemes place outside M-space in the field of activation, unless they are being hyperactivated by some special operator such as Me in the case of $*_{ck.1}$. Incidentally, notice that schemes outside M-space but inside working memory are precisely those placed inside individually subscripted braces and/or brackets. The mental demand (M-demand or Md) of a task corresponds to the number of schemes that must be

boosted by M in the most M-demanding step of the M-construction.

Long step-by-step M-constructions can be summarized or heuristically abbreviated with an alternative method that we have called metasubjective dimensional analysis (e.g., de Ribaupierre & Pascual-Leone, 1979). In this variety of dimensional analysis (illustrated at the bottom of Figure 4), the steps are collapsed by nesting the successive operations with the help of nested parentheses, so that the innermost operation comes earliest, and the next operation to its left applies on the result or product of the previous operation, and so forth. The underlining in the dimensional analysis indicates the schemes boosted by M during each mental operation (i.e., READMEM and VOICE). The amount of mental attentional capacity (i.e., M-power or Mp) needed to achieve the modeled strategy corresponds to the number of schemes simultaneously boosted by M in that step of the M-construction (or dimensional analysis) that has the greatest M-demand (Pascual-Leone, 1998). In the analysis of the MAM-Simple task, the predicted performance corresponds to the number of letter-schemes boosted by M simultaneously (this is equal to k – 1, because one k-unit must boost the operative scheme), plus the number of letter-schemes that during the task are kept simultaneously inside working memory but outside M (i.e., letter-schemes boosted by L or Me, and predicted to be equal to two, or at most three, schemes). Thus, the number of consonants recalled (#c) should be equal to k + 1 (or at most k +2). A child with an Mp of e+4 should be able to recall on average five (or at most six) consonants. A child with an Mp of e+5 would be able to hold one additional consonant active in the M-space, and thus, should be able to recall on average six (or at most seven) consonants. It follows that one can estimate the child's M-power, in the Simple task, as being equal to the number of consonants recalled minus I (#c - 1); or #c - 2, if *ck.I can receive continuous boosting from Me.

The notation used in the analyses of the Other MAM subtasks repeats the principles and notational conventions already outlined; consequently we highlight only new important points,

leaving the reader to study the models for details of the strategy being modeled. In Figure 5 we have modeled a common strategy for the solution of the Telephone task. The first part of this task, the reading and memorizing of consonants (steps 1 to k+4), is shared with the Simple task and was modeled in Figure 4. We start the analysis in Figure 5 with step k+5, in which completion of the READ+MEM subtask evokes in the subject a change in executive plans ("telephone!") and thus shifts to the telephone subtask.

In the first step of this subtask (step k+6) the software operator SCANTEL appears; this is the operative for scanning the telephone in order to find on it the cognitive consonant-scheme $*c_I$. Notice that this consonant-scheme is instantiated within the L-structure constituted by SCANTEL and functions as its parameter. Notice, further, that the perceptual scheme for the pattern of this consonant within the telephone, i.e., tc_i, does not need to be boosted by M because it is being boosted directly by salient features of the situation (the subscripted "sit"). After having detected *tci, the subject proceeds (step k+7) to DIAL this consonant, and then (step k+8) to scan (SCANTEL) for the telephone site oftcz, and so on. We are assuming that the subject keeps in mind (inside M) the representation of the already dialed consonants, although this is not an important feature of the model. An important assumption comes, however, from the observation that the telephone task is not entirely facilitating: During the SCANTEL operations, when the subject attempts to find any one consonant *c; on the telephone (i.e., tc,), he or she suffers interference from the tc-patterns he or she sees during the search, because all these patterns match consonants that the subject is currently keeping in mind. To protect the processing from this interference, the subject must interrupt (with the attentional I-operator) the telephone patterns currently found to be irrelevant; and this interruption wipes out the schemes that are activated in working memory or the field of activation but outside M-space. Consequently, in step (k+8) and later on, none of these schemes are available for the subject to use, increasing the task M-demand by one unit relative to the Simple task. When

the rules given above for calculating the M-demand of this construction are applied, it indeed appears that in this task the subject's M-power is equal to the number of consonants he or she can recall successfully (Mp = #c). The analysis predicts that a child with an Mp of 0-4 should be able to recall, on average, four consonants in the Telephone task.

Finally in Figure 6 we have the modeled strategy for solving the MAM-Stroop task. The READ+MEM section is as before. In step (k+6) the subject, holding in M-space all the read-and-memorized consonants that fit in it (i.e., k - 1 consonants, where k is the M-capacity parameter discussed in Table 1), the subject applies the operation STROOP and names the ink colour on the Stroop card presented by the experimenter. This software operator STROOP carries as parameter 'cw,' the ink colour on the card; it also has a strongly misleading factor that is specific to it--the habit to read words rather than name their ink colour. We represent this misleading factor within brackets subscripted by a capital I in italics, which stands for the I-operator that is supposed to inhibit it; and superscript to the brackets to signify that this is a misleading factor. This circumstance, that is, the application of strong attentional interruption, ensures that all schemes outside the M-space will be inhibited as well. Consequently, as shown in the formulas by our rules for M-demand, the subject's estimated M-power in this subtask is equal to the number of consonants he or she recalls plus one (Mp = #c + 1). Thus, a child with an Mp of e+4 should be able to recall, on average, three consonants in the Stroop MAM task.

SUMMARY PRESENTATION OF DESCRIPTIVE DEVELOPMENTAL DATA

Predictions

The models presented above make three very clear structural predictions:

1. The three tasks differ by one unit in relative difficulty: For all developmental levels of M-capacity the models predict that the participant's M-power will be indexed by the following functions of the number of consonants recalled (#c): M-power index in Simple = #c - l; M-power index in

Telephone = #c; and M-power index in Stroop = #c + I. Thus we can predict that the mean recalled consonants across ages for each task will be such that they are ordered as predicted and linearly related in magnitude.

2. Given that participants commit executive errors or distractions, with some probability that could be estimated empirically (but that we will not estimate here); and given that these errors should lower the his or her performance, and that errors may become more likely as the task becomes longer (i.e., may be more likely in older participants who have greater M-power), we can make the following structural prediction: The number of consonants recalled (#c) will approximate the participant's own M-power theoretically predicted from his or her chronological age (see Table 1).

3. Because the actual organismic difficulty of an M-measurement task is conjointly determined by the task's M-demand and the participant's M-power (which changes with chronological age according to the idealized schedule given in Table I), it follows that. If the task's M-demand and the participant's M-power are changed concurrently (and in the same direction) within the data set (i.e., M-demand is changed with the task and M-power with the age of the sample), so that the difference Md - Mp Is held constant, the number of consonant recalled by the participants in the MAM task will also tend to be constant (cf. Pascual-Leone 1978 Pascual-Leone & Baillargeon, 1994).

Experimental Samples

Study 1. Participants in Study 1 were three samples of children from 9- to 14 years of age; N = 30 in each sample (Baskind, 1997). Participants were mainstream hearing children age-matched with academically-gifted hearing children and Deaf children. Deaf children attended a Provincial School for the Deaf, where they communicated in American Sign Language (ASL). The majority of the Deaf children had hearing parents. Deaf children were tested in ASL; they finger-spelled their responses. Gifted children had been identified as such by their School Board, on the basis of standardized test performance and teacher recommendation. Mainstream children had not been

identified as being eligible for the gifted programme. In each of the studies, participants' score on each MAM subtask is an average over eight trials.

Studies 2 and 3. The sample for Study 2 was comprised of 15 university students who volunteered from an Introductory Psychology research participants pool (Hakim, 1999). The samples for Study 2 were 28 volunteers from the participants pool, all of whom were native speakers of English; and 29 volunteers from first-year ESL (English as a second language) classes at the university (Polak, 1999).

Study 4. Participants for Study 4 were 18 children in each of age groups 3-4, 5-6, 7-8, and 9-10 years (Pascual-Leone, Goodman, Can-etero, & Benson, 1982). Participants received just the Simple and Telephone MAM subtasks. The 3-4-year-olds were tested on a simplified version that contained a set of only 10 consonants. To ensure that the members of this set could be discriminated by all preschoolers, a 15-20 minute period of preliminary discrimination and identification training preceded test administration.

Empirical Structural Evaluation of Predictions

1. To illustrate prediction 1 in our data (we do not intend in this paper to provide a definitive proof), we present data from studies 1, 2, and 3. Figure 7 illustrates mean performance by the child participants in Study 1, and Figure 8 presents similar data from three samples of adults (Studies 2 and 3). These data provide good support for prediction 1, support that other studies have confirmed. The heights of the columns for the three subtasks are related linearly within each sample. The reader can determine this by placing a ruler such that it spans the rightmost corners of the three task-histograms. within each sample.

2. Figure 9 presents data from Study 4. To evaluate the structural adequacy of these data one must look again Table 1, which presents the theoretically-predicted M-power for children of different ages. Based on our task analyses, prediction 2 stated that the measured M-power of

children in the MAM subtasks would be equal to: the number of consonants recalled (i.e., #c) in the Telephone, #c - I in the Simple, and #c + 1 in the Stroop subtask. The data in Figure 9 conform quite well to these predictions.

3. Prediction 3 states (with Pascual-Leone, 1970, 1978) that the true difficulty of the tasks is conjointly determined by the difference between the tasks'M-demand (obtained via task analysis) and the participant'sM-power (theoretically obtained via chronological age). Call Eql, Eq2, Eq3 each strand of data for which the difference Md minus Mp is a constant. Data columns with the same label (e.g., Eql) should have the same approximate height. Inspection of Figures 9 (Study 4) and 10 (Study 1) shows that equally labeled columns have equal or close-to-equal height.

SUMMARY CONCLUSIONS

Task analysis can go beyond common sense and make, without any empirical parameter estimation, sensible quantitative developmental predictions. But this is possible only when it is constructivist, intuitive and founded in a general model of psychological processes that works. Any theory/model can be used if it is explicit enough. Task analysis is a logic of discovery that cannot be achieved automatically. This is because, as with mathematical analysis, the method "does not, its fruitfulness notwithstanding, yield a mechanical (effective) discovery procedure" (Hinttikan & Remes, 1974, p. 48); on the contrary, it necessitates inferential processes (the abductions of Pierce) informed by substantive tacit knowledge (Polanyi, 1964). When task analysis is predictive, its empirical evaluation constitutes a hypothetical-deductive test of the theoretical model; when the analysis is postdictive, it will not test the theoretical model but can serve to differentiate it. This dual feature of the method, being usable both posdictively and predictively, makes it particularly promising within developmental neuropsychology and psychometrics -- fields with a need for methods that can help in the semantic (information processing) interpretation of important tasks. We have illustrated how such a thing can be done using a task paradigm that is simple enough but psychologically interesting.

We believe we made a persuasive case. As happens with all methods of analysis, however, the reader must use the method in his or her investigations to become convinced. Semantic logical methods can best be appreciated when the mind experiences the force of their representational power.

ACKNOWLEDGEMENTS

This research was funded by operating grants from the Social Sciences and Humanities Research Council of Canada and a research grant from the Faculty of Arts, York University. We acknowledge the contribution of the following students, and former students, who were involved in data collection: Stacey Baskind (Study 1), Lila Hakim (Study 2), Elizabeth Polak (Study 3), Nancy Benson (Study 4), and Joanne Niang-Pio Lee (Study 5). We also acknowledge the general assistance of Sarah Bauer and Sandra Cunning.

ADDRESSES AND AFFILIATIONS

Juan Pascual-Leone, Department of Psychology, York University, 4700 Keele Street, Toronto, Ontario, Canada M3J 1P3. Phone: 416-736-2100 ext. 66214. E-mail: juanpi'roorku.ca.

Janice Johnson, Department of Psychology, York University.

REFERENCES

Baskind, S.L. (1997). Mental capacity assessment of Deaf children. Unpublished master's thesis, York University, Toronto, Canada

Case, R. (Ed.) (1992). The mind's staircase. Hillsdale, NJ: Erlbaum.

Case, R. (1998). The development of conceptual structures. In W. Damon (Series Ed.) & Kuhn, D., & Siegler, R. (Vol. Eds.), Handbook of child psychology: Vol. 2. Cognition, perception, and language (5s' ed., pp. 745-800). New York: Wiley.

Case, R., Okamoto, Y., Henderson, B., & McKeough, A. (1993). Individual variability and consistency in cognitive development: New evidence for the existence of central conceptual structures. R. Case & W. Edelstein (Eds.), The new structuralism in cognitive development: Theory and research on individual pathways (pp. 71-100). Basel: Karger.

Hakim, L. (1999). Developmental and individual differences in performance on a mental-attention arithmetic task. Unpublished honours BA thesis, York University, Toronto, Canada.

Halford, G. (1993). Children's understanding: The development of mental models. Hillsdale, NJ: Erlbaum.

Halford, G., Wilson, W., & Phillips, S. (1998.) Processing capacity defined by relational complexity: Implications for comparative, developmental, and cognitive psychology. Behavioral and Brain Sciences, 21, 803-864.

Hintikka, J., & Remes, U. (1974). The method of analysis: Its geometrical origin and its general significance. Boston: D. Reidel.

Johnson, J., Fabian, V., & Pascual-Leone, J. Quantitative hardware-stages that constrain language development. Human Development, 32, 245-271.

Pascual-Leone, J. (1970). A mathematical model for the transition rule in Piaget's developmental stages. Acta Psychologica, 32, 301-345.

Pascual-Leone, J. (1978). Compounds, confounds, and models in developmental information processing: A reply to Trabasso and Foellinger. Journal of Experimental Child Psychology, 26, 18-40.

Pascual-Leone, J. (1980). Constructive problems for constructive theories: The current relevance of Piaget's work and a critique of information-processing simulation psychology. In R. Kluwe & H. Spada (Eds.), Developmental models of thinking (pp. 263-296). NY: Academic Press.

Pascual-Leone, J. (1987). Organismic processes for neo-Piagetian theories: A dialectical causal account of cognitive development. International Journal of Psychology, 22, 531-570.

Pascual-Leone, J. (1989). An organismic process model of Witkin's field-dependence-independence. In T. Globerson & T. Zelniker (Eds.), Cognitive style and cognitive development (pp. 36-70). Norwood, NJ: Ablex.

Pascual-Leone, J. (1995). Learning and development as dialectical factors in cognitive growth. Human Development, 38, 338-348.

Pascual-Leone, J. (1998). To appraise developmental difficulty or mental demand, relational complexity is not enough. Behavioral and Brain Sciences, 21, 843-844.

Pascual-Leone, J., & Baillargeon, R. (1994). Developmental measurement of mental attention. International Journal of Behavioral Development, 17, 161-200.

Pascual-Leone, J., & Goodman, D. (1979). Intelligence and experience: A Neo- Piagetian approach. Instructional Science, 8, 301-367.

Pascual-Leone, J., Goodman, D., Carretero,M., & Benson, N. (1982). M-power and I-interruption in a mental memory centration task. Paper presented at the University of Waterloo Conference on Child Development, Waterloo, Ontario.

Pascual-Leone, J., & Johnson, J. (1991). The psychological unit and its role in task analysis. A reinterpretation of object permanence. In M. Chandler & M. Chapman (Eds.), Criteria for

competence: Controversies in the assessment of children's abilities (pp. 153-187). Hillsdale, NJ: Erlbaum.

Pascual-Leone, J., & Johnson. J. (1999). A dialectical constructivist view of representation: Rose of mental attention, executives, and symbols. In I. Sigel (Ed.), Development of mental representation: Theories and applications (pp. 169-200). Mahwah, NJ: Erlbaum.

Pascual-Leone, J. & Mona, S. (1991). Horizontality of water level: A neoPiagetian developmental review. Advances in Child Development and Behaviour, 23, 231-276.

Polak, E. (1999). The relationship between language proficiency and performance on the direction following task. Unpublished honours BA thesis, York University, Toronto, Canada.

Polanyi, M. (1964). Personal knowledge: Towards a post-critical philosophy. New York: Harper Torchbooks.

Proctor, R., & Reeve, T (Eds.), (1990). Stimulus response compatibility. Amsterdam: North-Holand.

de Ribaupierre, A., & Pascual-Leone, J. (1979). Formal operations and M power: A neo-Piagetian investigation. In D. Kuhn (Ed.), Intellectual development beyond childhood (pp. 1-43). San Francisco: Jossey-Bass.

Robin, N., & Holyoak, K. (1995). Relational complexity and the functions of prefrontal cortex. In M. Gazzaniga (Ed.), The cognitive neurosciences (pp. 987-997). Cambridge, MA: MIT Press.

Table 1

Predicted M-power Values as a Function of Age and their Correspondence to the Piagetian Substage Sequence

M-power (e + k)	Piagetian substage	Chronological age (Years)
e + 1	Low preoperations	3-4
e + 2	High preoperations	5-6
e + 3	Low concrete operations	7-8
e + 4	High concrete operations	9-10
e + 5	Transition to formal operations	11-12
e + 6	Low formal operations	13-14
e + 7	High formal operations	15-16

Note: In this model, a is the M-power that develops during the first 26 to 28 months of life, and later used as a constant to maintain hyperactivation of the tasks' general executive. Variable k is the M-power emerging later, often used to activate "action" schemes.

Table 2

Subjective analysis of MAM subtasks

Example: Dimensional Complexity in terms of dimensions of variation, i.e., Dimensional Analysis.

MAM-SIMPLE:

VOICE(READMEM ci, C2, C3, ... , Ck+4)

MAM-TELEPHONE:

DIAL(SCANTEL(READMEM cl, C2, C3, ... , Ck+4))

MAM-STROOP:

VOICE((STROOP, cw[w])" READMEM c_i, C2, C3, ... , Ck+4)

Table 3
Definitions of symbols used in task analyses

Symbol	Definition
{	Field of activated schemes; i.e., field enclosed by the outer ellipse in Figure 2.
M, E	Italicized capital letters represent mental attention operators: M-capacity and the executive (E).
M	Square brackets symbolize the A4-space, i.e., the space inside the innermost ellipse in Figure 2.
M [... CAPITALS c_1] –▶ $*c_1$	Words in capitals (e.g., READMEM, VOICE, SCANTEL, etc.) symbolize operative schemes. Lower case letters symbolize figurative schemes (e.g., c_1). Operative schemes apply on the figurative schemes or operations placed to their right. The result of this application—a new figurative scheme—appears to the right of the arrow. The asterisk symbolizes a more cognitive figurative scheme: $*c_1$ is the cognitive encoding of the perceptual consonant c_1.
Al ... {Cl}sit]	Braces { ... } inside the M-space indicate that the schemes within the braces do not need to be hyperactivated by M-capacity, because they are being boosted by other factors. This other source of boosted (e.g., sit, L_I) is indicated as a subscript to the internal braces.
M [... $VOICE^{LI}$ { $*c_2$ }LI]	A scheme with a superscripted L symbol is an L-structure (a Logical-structural "chunking") that includes, as a coordinated part, a place for the scheme in the internal braces to its right. The L structuring is also indicated by L subscripted to the braces. In the example, $*c_2$ has a place in the L-structure VOICE; $*c_2$ is activated directly by VOICE and, thus, does not need M-boosting.
{[$^{*}C_k$]Ne, * Ck2 2, .. M[...] $^{*}C_{k.1}$ ... }	Schemes placed outside the M-space are in the field of activation. In this example, $*c_k$ is being boosted by the mental capacity (Me) developed during the sensorimotor period. This is symbolized by the square brackets with subscripted Me. The scheme * ek+2 is in the field of activation, but without a source of activation.

Table coned.

{ ... M[...] RES"(*c_i) ... }	"RES is the overt response, in this case, the voicing of the consonant *c_1.
{... M[... $SCANTEL_{LI}$ {*c_1}°$_{LI}$ {tc_i}$_{s,t}$] –▶ *tc_i ... }	The operative scheme SCANTEL (i.e., scanning the telephone dial) has a parameter or condition for its functioning—the consonant (e.g., *c_i) to be found. This parameter (symbolized by #) is part of the L-structure or chunk of SCANTEL. SCANTEL and its parameter apply on tc, (the perceptual scheme of consonant c_1 on the telephone dial) to produce its cognitive situated representation *tc_1.

FIGURE CAPTIONS

Figure 1. Model of mental attention.

Figure 2. Objective analysis of mental attention memory Simple (Task 1) and Stroop (Tasks 1 & 2). Consonants (c) are read and MEMorized and then Voiced to produce the consonant RESponses. In the Stroop subtask, participants must respond to a Stroop card before Voicing each consonant. This produces a conflict between Voicing the colour of the ink (cw) vs. the colour-word itself (w).

Figure 3. Objective analysis of mental attention memory Telephone subtask. Once the consonants (c) have been Read and MEMorized, the participant must find (SCAN) and DIAL each consonant on a rotary phone before he or she voices the RESponse.

Figure 4. M-construction (metasubjective analysis) of mental attention memory Simple subtask for a child with Mp = e + 4.

Figure 5. M-construction (metasubjective analysis) of mental attention memory Telephone subtask for a child with Mp = e + 4.

Figure 6. M-construction (metasubjective analysis) of mental attention memory Stroop subtask for a child with Mp = e + 4.

Figure 7. Mean consonants recalled by children in study 1, as a function of group and MAM subtask. Bars indicate 95% confidence intervals.

Figure 8. Mean consonants recalled in studies 2 and 3, as a function of adult sample and MAM subtask. Bars indicate 95% confidence intervals.

Figure 9. Mean consonants recalled by children in study 4, as a function of age-group and MAM subtask. Identically labeled columns (e.g., Eql) are predicted to have the same approximate height.

Figure 10. Mean consonants recalled by hearing children (mainstream and gifted) in study 1, as a function of age-group and MAM subtask. Identically labeled columns (e.g., Eq l) are predicted to have the same approximate height.

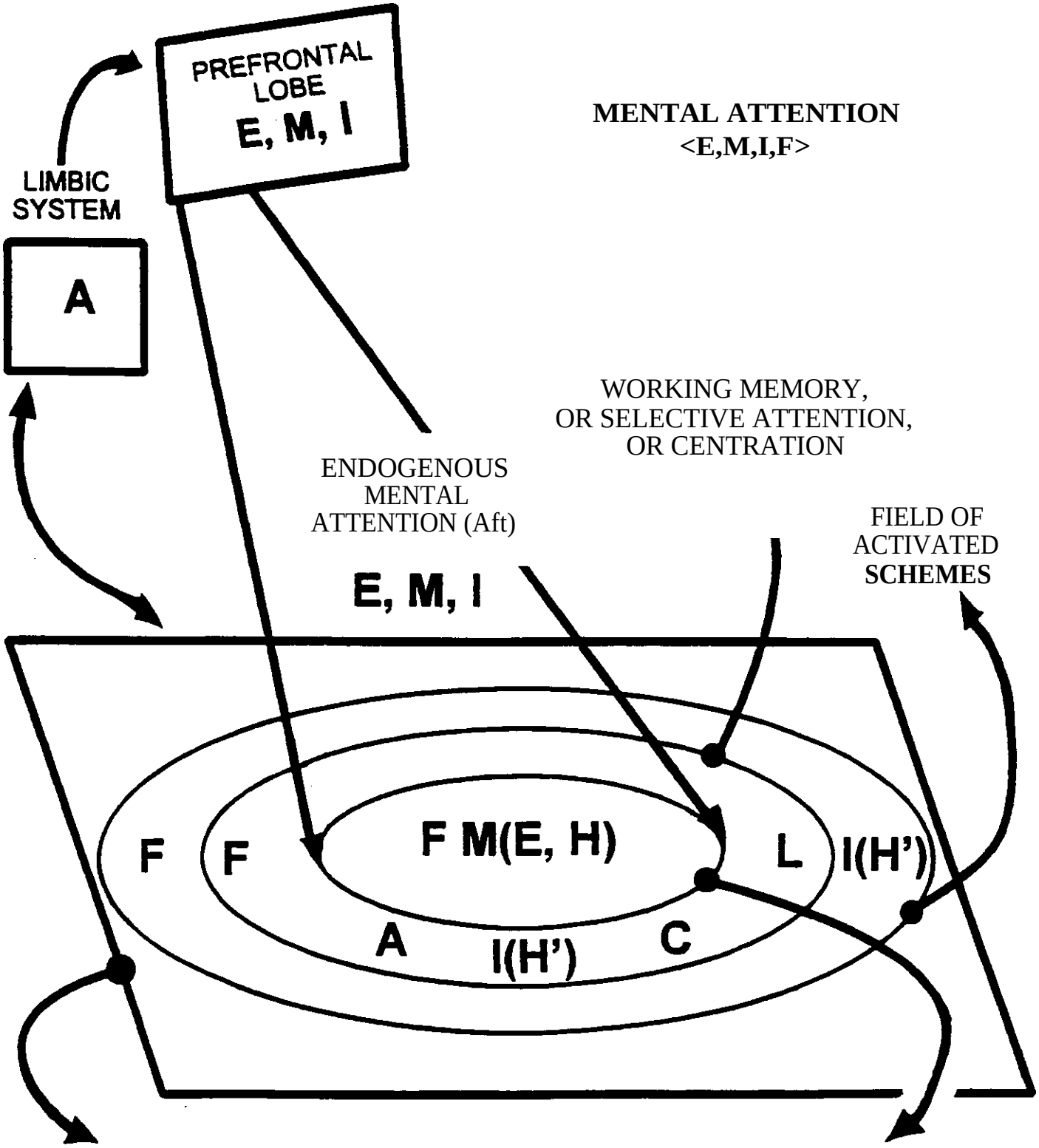

REPERTOIRE OF 'ACTION' SCHEMES
(FRONTAL, PARIETAL OCCIPITAL, & TEMPORAL)

MENTAL ATTENTION,
or M-CENTRATION,
or M-SPACE

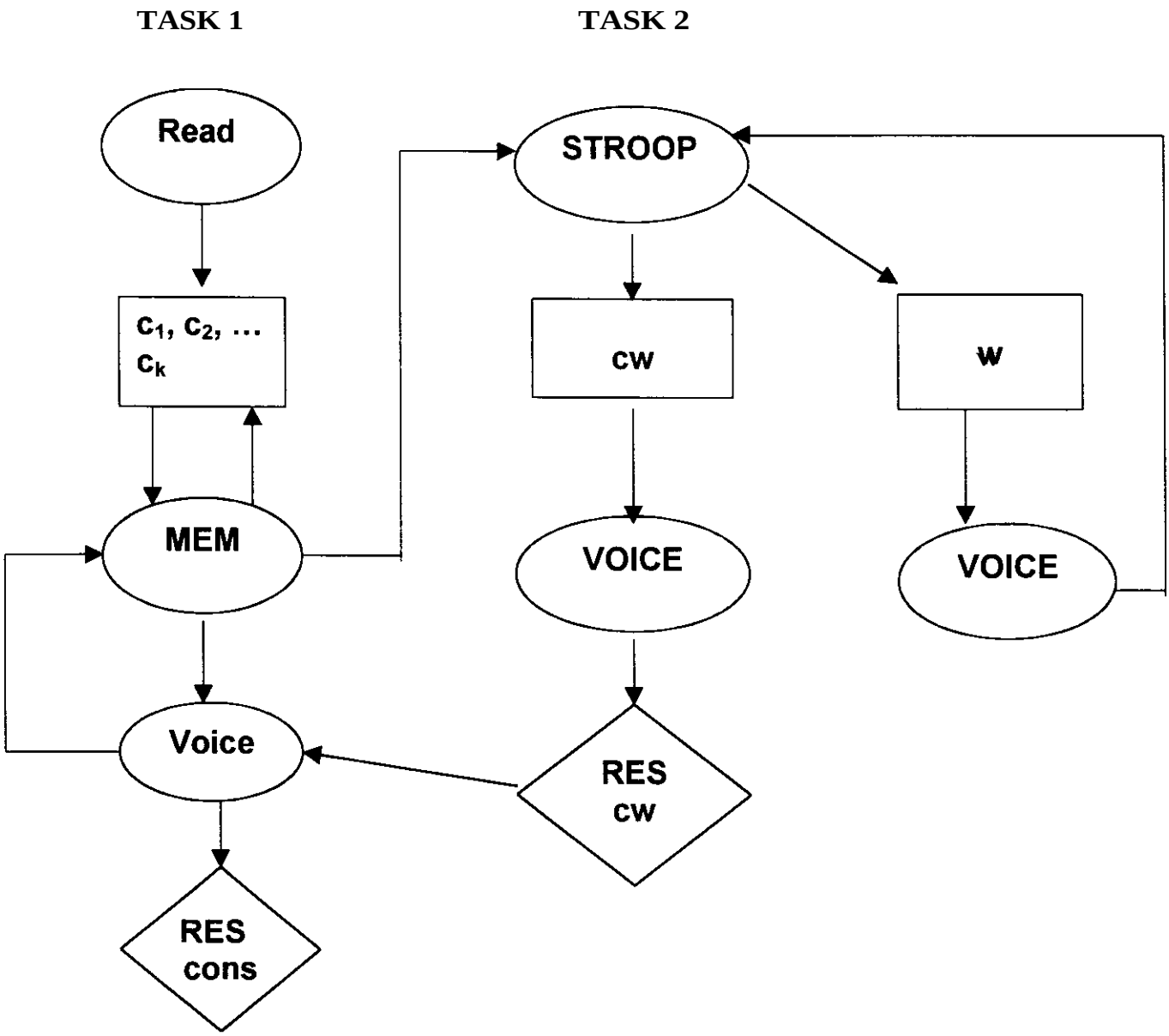
TASK 1
TASK 2
Read
STROOP
$c_1, c_2, \ldots c_k$
cw
w
MEM
VOICE
VOICE
Voice
RES cw
RES cons

TASK 1 **TASK 2**

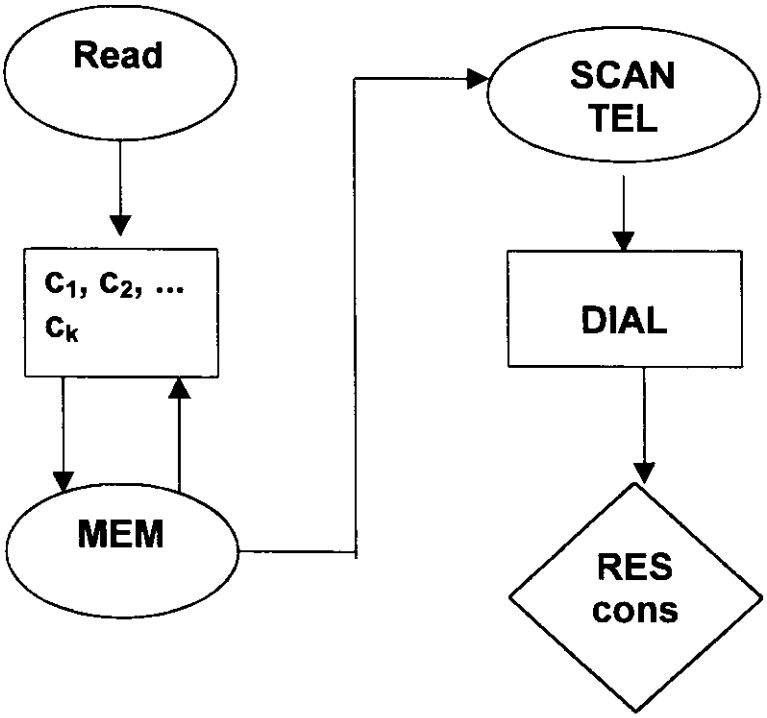

(1) { ._*M[E,* READMEM{cI}sit] _* *cl }

(2) { ..M[E, *c$_1$, READMEM{c2}sit] *c2... }

(3) { ...M[*E,* *CI, *c2, READMEM{c3}sit] *c3

(k=4) { ... M[E, *cl, *c2, *C$_3$, READMEM{ck},it] ' *ck... }

(k+l) { [*ck]Me... *M[E,* *cl, *C2, *C3, READMEM{ck+l}sa] • *ck+1 }

(k+2) { [* Ck]Me [*Ck+l]Me?-.. *M [E,* * CI. * C2, * C3, READMEM(ck+2}sit] * Ck+2... }

(k+3) { [*Ck]Me [*Ck+l]Me?, *Ck+2 ...M [*E,* *cl. *C2, *C3, READMEM{ Ck+3 }sit *ck+3... }

(k+4) [[* Ck]Me, [*Ck+I]Me?, *Ck+2, *Ck+3 ,.. M *[E,* *Cl, *C2, *C3, READMEM{Ck+4}sit] * Ck+4 ... }

(k+5) { [*Ck]Me, [*Ck+1]Me?, * Ck+2, *Ck+3 ... *M [E,* MEM^{LI} { *Ck+4}Ll, *CI, *C2, * c3] —* voice! .. }

(k+6) { [*Ck]Me, [*Ck+l]Me?, * Ck+2, *Ck+3 ... *M [E,* *C2,* C3, *Ck+4, VOICE^{LI} { *cl }LI] —' RES''(^{*c} l) }

(k+7) { [*Ck+l]Me? ...M [*E,* *C3, *Ck, * Ck+4 VOICE^{LI} { *c2}LI] − RES"(*C2), ... }

• •

MS-DIMENSIONAL ANALYSIS FOR k=4:

M[VOICE^{L2}(READMEM^{LI} { *CI }L2, * c2, * c3, { * Ck}Me, {*C0-1}Me?, { * Ck+4}L1)]

READ + MEMO : Same as SIMPLE task

(I)

(k+5) { [*Ck]k1e, [*Ck+I]Mie?, *Ck+2, *Ck+3 ... *M [E,* MEM^{LI} { *Ck14}L1, *Cl, *C2, *c3] telephone! ... }

SCAN +DIALI

(k+6) { [*Ck]61e, [*Ck+l]Me4, *ck+2, *ck 3.. *M [E,* *c2, *c3, ***ck+4,** SCANTEL^{LI} { *CI} $^\#$L1 {tCl}sit] *tcl }

(k+7) { [*ckJ%f ? ... *M [E,* *c2, *c3, *c_k+4, DIAL^{LI} { *tcl }Ll,sk] clDialed ... }

(k+8) { *M [E,* clDialed, *c3, *Ck+4, SCANTEL$^{L'}$ { *c2} ^{I}LI {tc2}sa] -^{9} *tc2 _. }

(k+I3) { ... *M [E,* c$_l$Dialed, c2Dialed, c$_3$Dialed, DIAL^{LI} {*tck+4}LI,sit $c_k{}^+{}_4$Dialed

● ●

MS-DIMENSIONAL ANALYSIS FOR k=4:

M[DIAL^{L3}(SCANTEL^{L2}(READMEM^{LI} {*cl}a,L3, {*Ck+4}LI))}